General Principles

CHAPTER OBJECTIVES

- To provide an introduction to the basic quantities and idealizations of mechanics.
- To give a statement of Newton's Laws of Motion and Gravitation.
- To review the principles for applying the SI system of units.
- To examine the standard procedures for performing numerical calculations.
- To present a general guide for solving problems.

1.1 Mechanics

Mechanics is a branch of the physical sciences that is concerned with the state of rest or motion of bodies that are subjected to the action of forces. In general, this subject can be subdivided into three branches: *rigid-body mechanics, deformable-body mechanics*, and *fluid mechanics*. In this book we will study rigid-body mechanics since it is a basic requirement for the study of the mechanics of deformable bodies and the mechanics of fluids. Furthermore, rigid-body mechanics is essential for the design and analysis of many types of structural members, mechanical components, or electrical devices encountered in engineering.

Rigid-body mechanics is divided into two areas: statics and dynamics. ***Statics*** deals with the equilibrium of bodies, that is, those that are either at rest or move with a constant velocity; whereas ***dynamics*** is concerned with the accelerated motion of bodies. We can consider statics as a special case of dynamics, in which the acceleration is zero; however, statics deserves separate treatment in engineering education since many objects are designed with the intention that they remain in equilibrium.

Historical Development. The subject of statics developed very early in history because its principles can be formulated simply from measurements of geometry and force. For example, the writings of Archimedes (287–212 B.C.) deal with the principle of the lever. Studies of the pulley, inclined plane, and wrench are also recorded in ancient writings—at times when the requirements for engineering were limited primarily to building construction.

Since the principles of dynamics depend on an accurate measurement of time, this subject developed much later. Galileo Galilei (1564–1642) was one of the first major contributors to this field. His work consisted of experiments using pendulums and falling bodies. The most significant contributions in dynamics, however, were made by Isaac Newton (1642–1727), who is noted for his formulation of the three fundamental laws of motion and the law of universal gravitational attraction. Shortly after these laws were postulated, important techniques for their application were developed by other scientists and engineers, some of whom will be mentioned throughout the text.

1.2 Fundamental Concepts

Before we begin our study of engineering mechanics, it is important to understand the meaning of certain fundamental concepts and principles.

Basic Quantities. The following four quantities are used throughout mechanics.

Length. ***Length*** is used to locate the position of a point in space and thereby describe the size of a physical system. Once a standard unit of length is defined, one can then use it to define distances and geometric properties of a body as multiples of this unit.

Time. ***Time*** is conceived as a succession of events. Although the principles of statics are time independent, this quantity plays an important role in the study of dynamics.

Mass. ***Mass*** is a measure of a quantity of matter that is used to compare the action of one body with that of another. This property manifests itself as a gravitational attraction between two bodies and provides a measure of the resistance of matter to a change in velocity.

Force. In general, ***force*** is considered as a "push" or "pull" exerted by one body on another. This interaction can occur when there is direct contact between the bodies, such as a person pushing on a wall, or it can occur through a distance when the bodies are physically separated. Examples of the latter type include gravitational, electrical, and magnetic forces. In any case, a force is completely characterized by its magnitude, direction, and point of application.

Idealizations. Models or idealizations are used in mechanics in order to simplify application of the theory. Here we will consider three important idealizations.

Particle. A ***particle*** has a mass, but a size that can be neglected. For example, the size of the earth is insignificant compared to the size of its orbit, and therefore the earth can be modeled as a particle when studying its orbital motion. When a body is idealized as a particle, the principles of mechanics reduce to a rather simplified form since the geometry of the body *will not be involved* in the analysis of the problem.

Three forces act on the ring. Since these forces all meet at a point, then for any force analysis, we can assume the ring to be represented as a particle. (© Russell C. Hibbeler)

Rigid Body. A ***rigid body*** can be considered as a combination of a large number of particles in which all the particles remain at a fixed distance from one another, both before and after applying a load. This model is important because the body's shape does not change when a load is applied, and so we do not have to consider the type of material from which the body is made. In most cases the actual deformations occurring in structures, machines, mechanisms, and the like are relatively small, and the rigid-body assumption is suitable for analysis.

Concentrated Force. A ***concentrated force*** represents the effect of a loading which is assumed to act at a point on a body. We can represent a load by a concentrated force, provided the area over which the load is applied is very small compared to the overall size of the body. An example would be the contact force between a wheel and the ground.

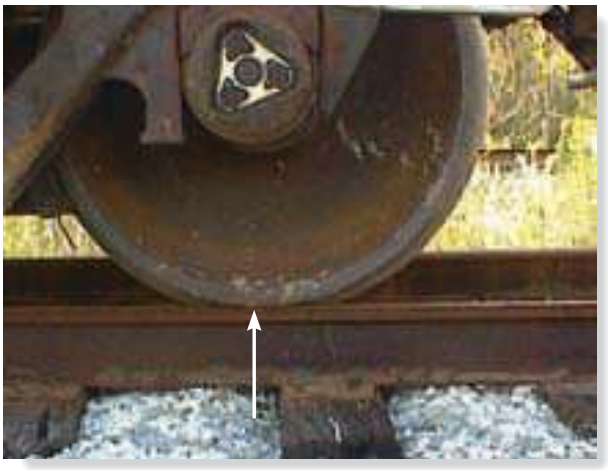

Steel is a common engineering material that does not deform very much under load. Therefore, we can consider this railroad wheel to be a rigid body acted upon by the concentrated force of the rail. (© Russell C. Hibbeler)

Newton's Three Laws of Motion. Engineering mechanics is formulated on the basis of Newton's three laws of motion, the validity of which is based on experimental observation. These laws apply to the motion of a particle as measured from a *nonaccelerating* reference frame. They may be briefly stated as follows.

First Law. A particle originally at rest, or moving in a straight line with constant velocity, tends to remain in this state provided the particle is *not* subjected to an unbalanced force, Fig. 1–1*a*.

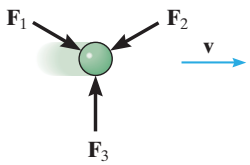

Equilibrium

(a)

Second Law. A particle acted upon by an *unbalanced force* **F** experiences an acceleration **a** that has the same direction as the force and a magnitude that is directly proportional to the force, Fig. 1–1*b*.* If **F** is applied to a particle of mass *m*, this law may be expressed mathematically as

$$\mathbf{F} = m\mathbf{a} \tag{1–1}$$

Accelerated motion

(b)

Third Law. The mutual forces of action and reaction between two particles are equal, opposite, and collinear, Fig. 1–1*c*.

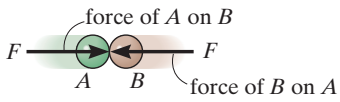

Action – reaction

(c)

Fig. 1–1

*Stated another way, the unbalanced force acting on the particle is proportional to the time rate of change of the particle's linear momentum.

Newton's Law of Gravitational Attraction. Shortly after formulating his three laws of motion, Newton postulated a law governing the gravitational attraction between any two particles. Stated mathematically,

$$F = G\frac{m_1 m_2}{r^2} \tag{1–2}$$

where

F = force of gravitation between the two particles

G = universal constant of gravitation; according to experimental evidence, $G = 66.73(10^{-12})\ \mathrm{m}^3/(\mathrm{kg}\cdot\mathrm{s}^2)$

m_1, m_2 = mass of each of the two particles

r = distance between the two particles

Weight. According to Eq. 1–2, any two particles or bodies have a mutual attractive (gravitational) force acting between them. In the case of a particle located at or near the surface of the earth, however, the only gravitational force having any sizable magnitude is that between the earth and the particle. Consequently, this force, termed the ***weight***, will be the only gravitational force considered in our study of mechanics.

From Eq. 1–2, we can develop an approximate expression for finding the weight W of a particle having a mass $m_1 = m$. If we assume the earth to be a nonrotating sphere of constant density and having a mass $m_2 = M_e$, then if r is the distance between the earth's center and the particle, we have

$$W = G\frac{mM_e}{r^2}$$

Letting $g = GM_e/r^2$ yields

$$\boxed{W = mg} \tag{1–3}$$

By comparison with $\mathbf{F} = m\mathbf{a}$, we can see that g is the acceleration due to gravity. Since it depends on r, then the weight of a body is *not* an absolute quantity. Instead, its magnitude is determined from where the measurement was made. For most engineering calculations, however, g is determined at sea level and at a latitude of 45°, which is considered the "standard location."

The astronaut's weight is diminished since she is far removed from the gravitational field of the earth. (© NikoNomad/ Shutterstock)

1.3 Units of Measurement

The four basic quantities—length, time, mass, and force—are not all independent from one another; in fact, they are *related* by Newton's second law of motion, $\mathbf{F} = m\mathbf{a}$. Because of this, the *units* used to measure these quantities cannot *all* be selected arbitrarily. The equality $\mathbf{F} = m\mathbf{a}$ is maintained only if three of the four units, called ***base units***, are *defined* and the fourth unit is then *derived* from the equation.

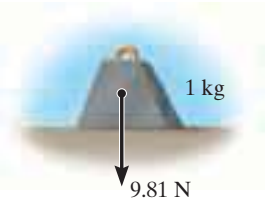

(a)

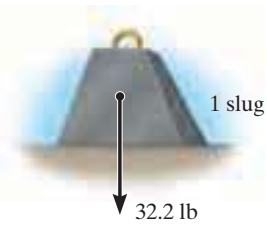

(b)

Fig. 1–2

SI Units. The International System of units, abbreviated SI after the French "Système International d'Unités," is a modern version of the metric system which has received worldwide recognition. As shown in Table 1–1, the SI system defines length in meters (m), time in seconds (s), and mass in kilograms (kg). The unit of force, called a ***newton*** (N), is *derived* from $\mathbf{F} = m\mathbf{a}$. Thus, 1 newton is equal to a force required to give 1 kilogram of mass an acceleration of 1 m/s^2 ($N = kg \cdot m/s^2$).

If the weight of a body located at the "standard location" is to be determined in newtons, then Eq. 1–3 must be applied. Here measurements give $g = 9.806\,65\ m/s^2$; however, for calculations, the value $g = 9.81\ m/s^2$ will be used. Thus,

$$W = mg \qquad (g = 9.81\ m/s^2) \tag{1–4}$$

Therefore, a body of mass 1 kg has a weight of 9.81 N, a 2-kg body weighs 19.62 N, and so on, Fig. 1–2*a*.

U.S. Customary. In the U.S. Customary system of units (FPS) length is measured in feet (ft), time in seconds (s), and force in pounds (lb), Table 1–1. The unit of mass, called a ***slug***, is *derived* from $\mathbf{F} = m\mathbf{a}$. Hence, 1 slug is equal to the amount of matter accelerated at 1 ft/s^2 when acted upon by a force of 1 lb (slug $= lb \cdot s^2/ft$).

Therefore, if the measurements are made at the "standard location," where $g = 32.2\ ft/s^2$, then from Eq. 1–3,

$$m = \frac{W}{g} \qquad (g = 32.2\ ft/s^2) \tag{1–5}$$

And so a body weighing 32.2 lb has a mass of 1 slug, a 64.4-lb body has a mass of 2 slugs, and so on, Fig. 1–2*b*.

TABLE 1–1 Systems of Units

Name	Length	Time	Mass	Force
International System of Units SI	meter m	second s	kilogram kg	newton* N $\left(\frac{kg \cdot m}{s^2}\right)$
U.S. Customary FPS	foot ft	second s	slug* $\left(\frac{lb \cdot s^2}{ft}\right)$	pound lb

*Derived unit.

Conversion of Units. Table 1–2 provides a set of direct conversion factors between FPS and SI units for the basic quantities. Also, in the FPS system, recall that 1 ft = 12 in. (inches), 5280 ft = 1 mi (mile), 1000 lb = 1 kip (kilo-pound), and 2000 lb = 1 ton.

TABLE 1–2 Conversion Factors

Quantity	Unit of Measurement (FPS)	Equals	Unit of Measurement (SI)
Force	lb		4.448 N
Mass	slug		14.59 kg
Length	ft		0.3048 m

1.4 The International System of Units

The SI system of units is used extensively in this book since it is intended to become the worldwide standard for measurement. Therefore, we will now present some of the rules for its use and some of its terminology relevant to engineering mechanics.

Prefixes. When a numerical quantity is either very large or very small, the units used to define its size may be modified by using a prefix. Some of the prefixes used in the SI system are shown in Table 1–3. Each represents a multiple or submultiple of a unit which, if applied successively, moves the decimal point of a numerical quantity to every third place.* For example, 4 000 000 N = 4 000 kN (kilo-newton) = 4 MN (mega-newton), or 0.005 m = 5 mm (milli-meter). Notice that the SI system does not include the multiple deca (10) or the submultiple centi (0.01), which form part of the metric system. Except for some volume and area measurements, the use of these prefixes is to be avoided in science and engineering.

TABLE 1–3 Prefixes

	Exponential Form	Prefix	SI Symbol
Multiple			
1 000 000 000	10^9	giga	G
1 000 000	10^6	mega	M
1 000	10^3	kilo	k
Submultiple			
0.001	10^{-3}	milli	m
0.000 001	10^{-6}	micro	μ
0.000 000 001	10^{-9}	nano	n

*The kilogram is the only base unit that is defined with a prefix.

Rules for Use. Here are a few of the important rules that describe the proper use of the various SI symbols:

- Quantities defined by several units which are multiples of one another are separated by a *dot* to avoid confusion with prefix notation, as indicated by $\mathrm{N} = \mathrm{kg \cdot m/s^2} = \mathrm{kg \cdot m \cdot s^{-2}}$. Also, $\mathrm{m \cdot s}$ (meter-second), whereas ms (milli-second).
- The exponential power on a unit having a prefix refers to both the unit *and* its prefix. For example, $\mu\mathrm{N}^2 = (\mu\mathrm{N})^2 = \mu\mathrm{N} \cdot \mu\mathrm{N}$. Likewise, mm^2 represents $(\mathrm{mm})^2 = \mathrm{mm \cdot mm}$.
- With the exception of the base unit the kilogram, in general avoid the use of a prefix in the denominator of composite units. For example, do not write N/mm, but rather kN/m; also, m/mg should be written as Mm/kg.
- When performing calculations, represent the numbers in terms of their *base or derived units* by converting all prefixes to powers of 10. The final result should then be expressed using a *single prefix*. Also, after calculation, it is best to keep numerical values between 0.1 and 1000; otherwise, a suitable prefix should be chosen. For example,

$$\begin{aligned}(50\ \mathrm{kN})(60\ \mathrm{nm}) &= \left[50(10^3)\ \mathrm{N}\right]\left[60(10^{-9})\ \mathrm{m}\right] \\ &= 3000(10^{-6})\ \mathrm{N \cdot m} = 3(10^{-3})\ \mathrm{N \cdot m} = 3\ \mathrm{mN \cdot m}\end{aligned}$$

1.5 Numerical Calculations

Computers are often used in engineering for advanced design and analysis. (© Blaize Pascall/Alamy)

Numerical work in engineering practice is most often performed by using handheld calculators and computers. It is important, however, that the answers to any problem be reported with justifiable accuracy using appropriate significant figures. In this section we will discuss these topics together with some other important aspects involved in all engineering calculations.

Dimensional Homogeneity. The terms of any equation used to describe a physical process must be ***dimensionally homogeneous***; that is, each term must be expressed in the same units. Provided this is the case, all the terms of an equation can then be combined if numerical values are substituted for the variables. Consider, for example, the equation $s = vt + \frac{1}{2}at^2$, where, in SI units, s is the position in meters, m, t is time in seconds, s, v is velocity in m/s and a is acceleration in $\mathrm{m/s^2}$. Regardless of how this equation is evaluated, it maintains its dimensional homogeneity. In the form stated, each of the three terms is expressed in meters $\left[\mathrm{m}, (\mathrm{m}/\cancel{\mathrm{s}})\cancel{\mathrm{s}}, (\mathrm{m}/\cancel{\mathrm{s}^2})\cancel{\mathrm{s}^2}\right]$ or solving for a, $a = 2s/t^2 - 2v/t$, the terms are each expressed in units of $\mathrm{m/s^2}$ $\left[\mathrm{m/s^2}, \mathrm{m/s^2}, (\mathrm{m/s})/\mathrm{s}\right]$.

Keep in mind that problems in mechanics always involve the solution of dimensionally homogeneous equations, and so this fact can then be used as a partial check for algebraic manipulations of an equation.

Significant Figures. The number of significant figures contained in any number determines the accuracy of the number. For instance, the number 4981 contains four significant figures. However, if zeros occur at the end of a whole number, it may be unclear as to how many significant figures the number represents. For example, 23 400 might have three (234), four (2340), or five (23 400) significant figures. To avoid these ambiguities, we will use *engineering notation* to report a result. This requires that numbers be rounded off to the appropriate number of significant digits and then expressed in multiples of (10^3), such as (10^3), (10^6), or (10^{-9}). For instance, if 23 400 has five significant figures, it is written as $23.400(10^3)$, but if it has only three significant figures, it is written as $23.4(10^3)$.

If zeros occur at the beginning of a number that is less than one, then the zeros are not significant. For example, 0.008 21 has three significant figures. Using engineering notation, this number is expressed as $8.21(10^{-3})$. Likewise, 0.000 582 can be expressed as $0.582(10^{-3})$ or $582(10^{-6})$.

Rounding Off Numbers. Rounding off a number is necessary so that the accuracy of the result will be the same as that of the problem data. As a general rule, any numerical figure ending in a number greater than five is rounded up and a number less than five is not rounded up. The rules for rounding off numbers are best illustrated by examples. Suppose the number 3.5587 is to be rounded off to *three* significant figures. Because the fourth digit (8) is *greater than* 5, the third number is rounded up to 3.56. Likewise 0.5896 becomes 0.590 and 9.3866 becomes 9.39. If we round off 1.341 to three significant figures, because the fourth digit (1) is *less than* 5, then we get 1.34. Likewise 0.3762 becomes 0.376 and 9.871 becomes 9.87. There is a special case for any number that ends in a 5. As a general rule, if the digit preceding the 5 is an *even number*, then this digit is *not* rounded up. If the digit preceding the 5 is an *odd number*, then it is rounded up. For example, 75.25 rounded off to three significant digits becomes 75.2, 0.1275 becomes 0.128, and 0.2555 becomes 0.256.

Calculations. When a sequence of calculations is performed, it is best to store the intermediate results in the calculator. In other words, do not round off calculations until expressing the final result. This procedure maintains precision throughout the series of steps to the final solution. In this text we will generally round off the answers to three significant figures since most of the data in engineering mechanics, such as geometry and loads, may be reliably measured to this accuracy.

When solving problems, do the work as neatly as possible. Being neat will stimulate clear and orderly thinking, and vice versa. (© Russell C. Hibbeler)

1.6 General Procedure for Analysis

Attending a lecture, reading this book, and studying the example problems helps, but **the most effective way of learning the principles of engineering mechanics is to *solve problems***. To be successful at this, it is important to always present the work in a *logical* and *orderly manner*, as suggested by the following sequence of steps:

- Read the problem carefully and try to correlate the actual physical situation with the theory studied.
- Tabulate the problem data and *draw to a large scale* any necessary diagrams.
- Apply the relevant principles, generally in mathematical form. When writing any equations, be sure they are dimensionally homogeneous.
- Solve the necessary equations, and report the answer with no more than three significant figures.
- Study the answer with technical judgment and common sense to determine whether or not it seems reasonable.

Important Points

- Statics is the study of bodies that are at rest or move with constant velocity.
- A particle has a mass but a size that can be neglected, and a rigid body does not deform under load.
- A force is considered as a "push" or "pull" of one body on another.
- Concentrated forces are assumed to act at a point on a body.
- Newton's three laws of motion should be memorized.
- Mass is measure of a quantity of matter that does not change from one location to another. Weight refers to the gravitational attraction of the earth on a body or quantity of mass. Its magnitude depends upon the elevation at which the mass is located.
- In the SI system the unit of force, the newton, is a derived unit. The meter, second, and kilogram are base units.
- Prefixes G, M, k, m, μ, and n are used to represent large and small numerical quantities. Their exponential size should be known, along with the rules for using the SI units.
- Perform numerical calculations with several significant figures, and then report the final answer to three significant figures.
- Algebraic manipulations of an equation can be checked in part by verifying that the equation remains dimensionally homogeneous.
- Know the rules for rounding off numbers.

EXAMPLE 1.1

Convert 2 km/h to m/s How many ft/s is this?

SOLUTION

Since 1 km = 1000 m and 1 h = 3600 s, the factors of conversion are arranged in the following order, so that a cancellation of the units can be applied:

$$2\ \text{km/h} = \frac{2\ \cancel{\text{km}}}{\cancel{\text{h}}}\left(\frac{1000\ \text{m}}{\cancel{\text{km}}}\right)\left(\frac{1\ \cancel{\text{h}}}{3600\ \text{s}}\right)$$

$$= \frac{2000\ \text{m}}{3600\ \text{s}} = 0.556\ \text{m/s} \qquad \textit{Ans.}$$

From Table 1–2, 1 ft = 0.3048 m. Thus,

$$0.556\ \text{m/s} = \left(\frac{0.556\ \cancel{\text{m}}}{\text{s}}\right)\left(\frac{1\ \text{ft}}{0.3048\ \cancel{\text{m}}}\right)$$

$$= 1.82\ \text{ft/s} \qquad \textit{Ans.}$$

NOTE: Remember to round off the final answer to three significant figures.

EXAMPLE 1.2

Convert the quantities 300 lb · s and 52 slug/ft^3 to appropriate SI units.

SOLUTION

Using Table 1–2, 1 lb = 4.448 N.

$$300\ \text{lb}\cdot\text{s} = 300\ \cancel{\text{lb}}\cdot\text{s}\left(\frac{4.448\ \text{N}}{1\ \cancel{\text{lb}}}\right)$$

$$= 1334.5\ \text{N}\cdot\text{s} = 1.33\ \text{kN}\cdot\text{s} \qquad \textit{Ans.}$$

Since 1 slug = 14.59 kg and 1 ft = 0.3048 m, then

$$52\ \text{slug/ft}^3 = \frac{52\ \cancel{\text{slug}}}{\cancel{\text{ft}^3}}\left(\frac{14.59\ \text{kg}}{1\ \cancel{\text{slug}}}\right)\left(\frac{1\ \cancel{\text{ft}}}{0.3048\ \text{m}}\right)^3$$

$$= 26.8(10^3)\ \text{kg/m}^3$$

$$= 26.8\ \text{Mg/m}^3 \qquad \textit{Ans.}$$

1

EXAMPLE 1.3

Evaluate each of the following and express with SI units having an appropriate prefix: (a) (50 mN)(6 GN), (b) (400 mm)(0.6 MN)^2, (c) 45 MN^3/900 Gg.

SOLUTION

First convert each number to base units, perform the indicated operations, then choose an appropriate prefix.

Part (a)

$$\begin{aligned}(50\text{ mN})(6\text{ GN}) &= \left[50(10^{-3})\text{ N}\right]\left[6(10^{9})\text{ N}\right]\\ &= 300(10^{6})\text{ N}^2\\ &= 300(10^{6})\,\cancel{\text{N}^2}\left(\frac{1\text{ kN}}{10^3\,\cancel{\text{N}}}\right)\left(\frac{1\text{ kN}}{10^3\,\cancel{\text{N}}}\right)\\ &= 300\text{ kN}^2 \qquad \textit{Ans.}\end{aligned}$$

NOTE: Keep in mind the convention kN^2 = (kN)^2 = 10^6 N^2.

Part (b)

$$\begin{aligned}(400\text{ mm})(0.6\text{ MN})^2 &= \left[400(10^{-3})\text{ m}\right]\left[0.6(10^{6})\text{ N}\right]^2\\ &= \left[400(10^{-3})\text{ m}\right]\left[0.36(10^{12})\text{ N}^2\right]\\ &= 144(10^{9})\text{ m}\cdot\text{N}^2\\ &= 144\text{ Gm}\cdot\text{N}^2 \qquad \textit{Ans.}\end{aligned}$$

We can also write

$$\begin{aligned}144(10^{9})\text{ m}\cdot\text{N}^2 &= 144(10^{9})\text{ m}\cdot\cancel{\text{N}^2}\left(\frac{1\text{ MN}}{10^6\,\cancel{\text{N}}}\right)\left(\frac{1\text{ MN}}{10^6\,\cancel{\text{N}}}\right)\\ &= 0.144\text{ m}\cdot\text{MN}^2 \qquad \textit{Ans.}\end{aligned}$$

Part (c)

$$\begin{aligned}\frac{45\text{ MN}^3}{900\text{ Gg}} &= \frac{45(10^6\text{ N})^3}{900(10^6)\text{ kg}}\\ &= 50(10^{9})\text{ N}^3/\text{kg}\\ &= 50(10^{9})\,\cancel{\text{N}^3}\left(\frac{1\text{ kN}}{10^3\,\cancel{\text{N}}}\right)^3\frac{1}{\text{kg}}\\ &= 50\text{ kN}^3/\text{kg} \qquad \textit{Ans.}\end{aligned}$$

PROBLEMS

The answers to all but every fourth problem (asterisk) are given in the back of the book.

1–1. What is the weight in newtons of an object that has a mass of (a) 8 kg, (b) 0.04 kg, and (c) 760 Mg?

1–2. Represent each of the following combinations of units in the correct SI form: (a) kN/μs, (b) Mg/mN, and (c) MN/(kg · ms).

1–3. Represent each of the following combinations of units in the correct SI form: (a) Mg/ms, (b) N/mm, (c) mN/(kg · μs).

***1–4.** Convert: (a) 200 lb · ft to N · m, (b) 350 lb/ft^3 to kN/m^3, (c) 8 ft/h to mm/s. Express the result to three significant figures. Use an appropriate prefix.

1–5. Represent each of the following as a number between 0.1 and 1000 using an appropriate prefix: (a) 45 320 kN, (b) 568(10^5) mm, and (c) 0.00563 mg.

1–6. Round off the following numbers to three significant figures: (a) 58 342 m, (b) 68.534 s, (c) 2553 N, and (d) 7555 kg.

1–7. Represent each of the following quantities in the correct SI form using an appropriate prefix: (a) 0.000 431 kg, (b) 35.3(10^3) N, (c) 0.005 32 km.

***1–8.** Represent each of the following combinations of units in the correct SI form using an appropriate prefix: (a) Mg/mm, (b) mN/μs, (c) μm · Mg.

1–9. Represent each of the following combinations of units in the correct SI form using an appropriate prefix: (a) m/ms, (b) μkm, (c) ks/mg, and (d) km · μN.

1–10. Represent each of the following combinations of units in the correct SI form: (a) GN · μm, (b) kg/μm, (c) N/ks^2, and (d) kN/μs.

1–11. Represent each of the following with SI units having an appropriate prefix: (a) 8653 ms, (b) 8368 N, (c) 0.893 kg.

***1–12.** Evaluate each of the following to three significant figures and express each answer in SI units using an appropriate prefix: (a) (684 μm)/(43 ms), (b) (28 ms)(0.0458 Mm)/(348 mg), (c) (2.68 mm)(426 Mg).

1–13. The density (mass/volume) of aluminum is 5.26 slug/ft^3. Determine its density in SI units. Use an appropriate prefix.

1–14. Evaluate each of the following to three significant figures and express each answer in SI units using an appropriate prefix: (a) (212 mN)^2, (b) (52 800 ms)^2, and (c) [548(10^6)]$^{1/2}$ ms.

1–15. Using the SI system of units, show that Eq. 1–2 is a dimensionally homogeneous equation which gives F in newtons. Determine to three significant figures the gravitational force acting between two spheres that are touching each other. The mass of each sphere is 200 kg and the radius is 300 mm.

***1–16.** The *pascal* (Pa) is actually a very small unit of pressure. To show this, convert 1 Pa = 1 N/m^2 to lb/ft^2. Atmosphere pressure at sea level is 14.7 lb/in^2. How many pascals is this?

1–17. Water has a density of 1.94 slug/ft^3. What is the density expressed in SI units? Express the answer to three significant figures.

1–18. Evaluate each of the following to three significant figures and express each answer in SI units using an appropriate prefix: (a) 354 mg(45 km)/(0.0356 kN), (b) (0.004 53 Mg)(201 ms), (c) 435 MN/23.2 mm.

1–19. A concrete column has a diameter of 350 mm and a length of 2 m. If the density (mass/volume) of concrete is 2.45 Mg/m^3, determine the weight of the column in pounds.

***1–20.** If a man weighs 155 lb on earth, specify (a) his mass in slugs, (b) his mass in kilograms, and (c) his weight in newtons. If the man is on the moon, where the acceleration due to gravity is g_m = 5.30 ft/s^2, determine (d) his weight in pounds, and (e) his mass in kilograms.

1–21. Two particles have a mass of 8 kg and 12 kg, respectively. If they are 800 mm apart, determine the force of gravity acting between them. Compare this result with the weight of each particle.

Chapter 2

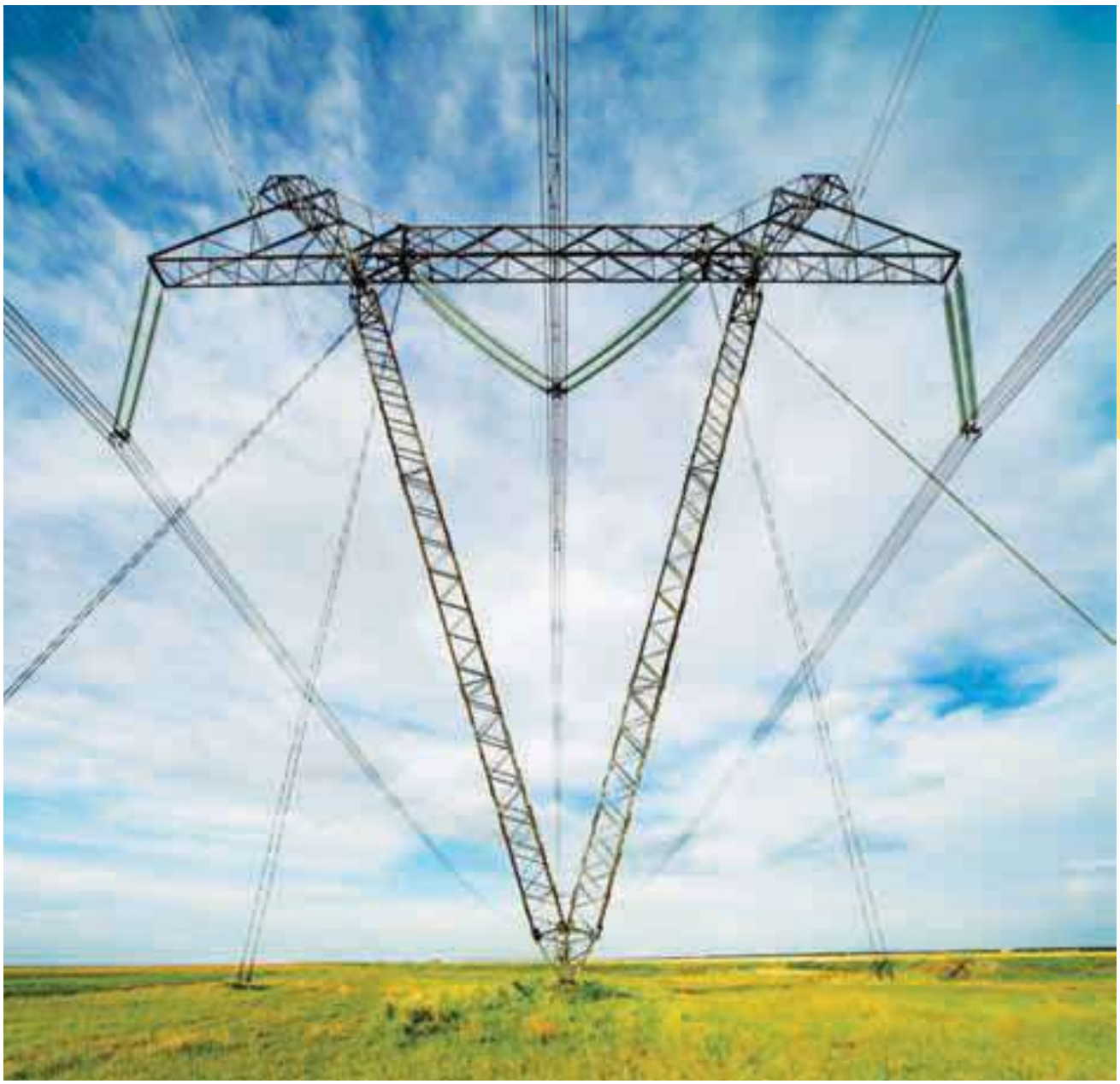

(© Vasiliy Koval/Fotolia)

This electric transmission tower is stabilized by cables that exert forces on the tower at their points of connection. In this chapter we will show how to express these forces as Cartesian vectors, and then determine their resultant.

Force Vectors

CHAPTER OBJECTIVES

- To show how to add forces and resolve them into components using the Parallelogram Law.
- To express force and position in Cartesian vector form and explain how to determine the vector's magnitude and direction.
- To introduce the dot product in order to use it to find the angle between two vectors or the projection of one vector onto another.

2.1 Scalars and Vectors

Many physical quantities in engineering mechanics are measured using either scalars or vectors.

Scalar. A ***scalar*** is any positive or negative physical quantity that can be completely specified by its *magnitude*. Examples of scalar quantities include length, mass, and time.

Vector. A ***vector*** is any physical quantity that requires both a *magnitude* and a *direction* for its complete description. Examples of vectors encountered in statics are force, position, and moment. A vector is shown graphically by an arrow. The length of the arrow represents the *magnitude* of the vector, and the angle θ between the vector and a fixed axis defines the *direction of its line of action*. The head or tip of the arrow indicates the *sense of direction* of the vector, Fig. 2–1.

In print, vector quantities are represented by boldface letters such as **A**, and the magnitude of a vector is italicized, A. For handwritten work, it is often convenient to denote a vector quantity by simply drawing an arrow above it, $\vec{A}$.

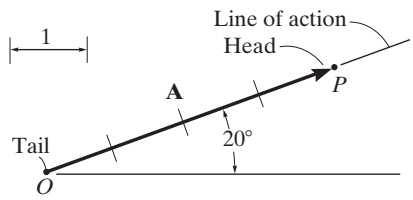

Fig. 2–1

2.2 Vector Operations

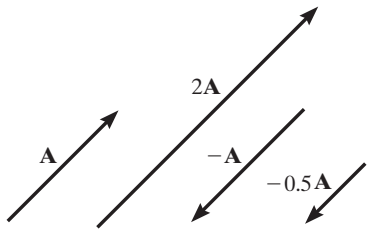

Scalar multiplication and division

Fig. 2–2

Multiplication and Division of a Vector by a Scalar. If a vector is multiplied by a positive scalar, its magnitude is increased by that amount. Multiplying by a negative scalar will also change the directional sense of the vector. Graphic examples of these operations are shown in Fig. 2–2.

Vector Addition. When adding two vectors together it is important to account for both their magnitudes and their directions. To do this we must use the ***parallelogram law of addition***. To illustrate, the two ***component vectors*** **A** and **B** in Fig. 2–3*a* are added to form a ***resultant vector*** $\mathbf{R} = \mathbf{A} + \mathbf{B}$ using the following procedure:

- First join the tails of the components at a point to make them concurrent, Fig. 2–3*b*.
- From the head of **B**, draw a line parallel to **A**. Draw another line from the head of **A** that is parallel to **B**. These two lines intersect at point *P* to form the adjacent sides of a parallelogram.
- The diagonal of this parallelogram that extends to *P* forms **R**, which then represents the resultant vector $\mathbf{R} = \mathbf{A} + \mathbf{B}$, Fig. 2–3*c*.

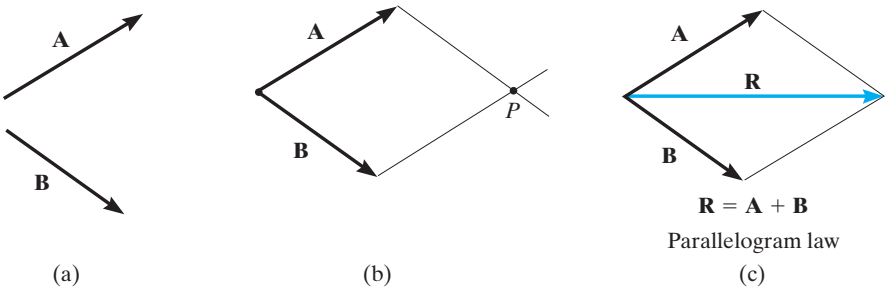

Fig. 2–3

We can also add **B** to **A**, Fig. 2–4*a*, using the ***triangle rule***, which is a special case of the parallelogram law, whereby vector **B** is added to vector **A** in a "head-to-tail" fashion, i.e., by connecting the head of **A** to the tail of **B**, Fig. 2–4*b*. The resultant **R** extends from the tail of **A** to the head of **B**. In a similar manner, **R** can also be obtained by adding **A** to **B**, Fig. 2–4*c*. By comparison, it is seen that vector addition is commutative; in other words, the vectors can be added in either order, i.e., $\mathbf{R} = \mathbf{A} + \mathbf{B} = \mathbf{B} + \mathbf{A}$.

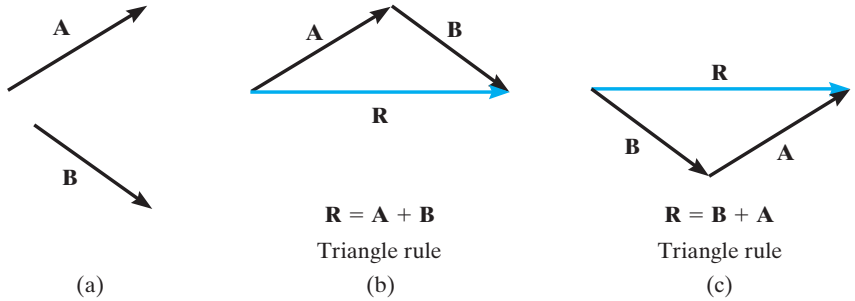

Fig. 2–4

As a special case, if the two vectors **A** and **B** are ***collinear***, i.e., both have the same line of action, the parallelogram law reduces to an *algebraic* or *scalar addition* $R = A + B$, as shown in Fig. 2–5.

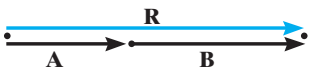

$R = A + B$

Addition of collinear vectors

Fig. 2–5

Vector Subtraction. The resultant of the *difference* between two vectors **A** and **B** of the same type may be expressed as

$$\mathbf{R}' = \mathbf{A} - \mathbf{B} = \mathbf{A} + (-\mathbf{B})$$

This vector sum is shown graphically in Fig. 2–6. Subtraction is therefore defined as a special case of addition, so the rules of vector addition also apply to vector subtraction.

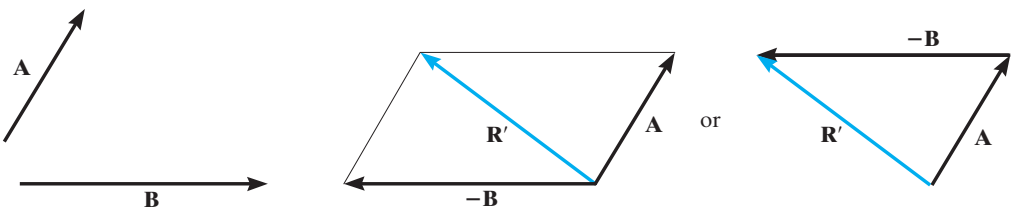

Parallelogram law

Triangle construction

Vector subtraction

Fig. 2–6

2.3 Vector Addition of Forces

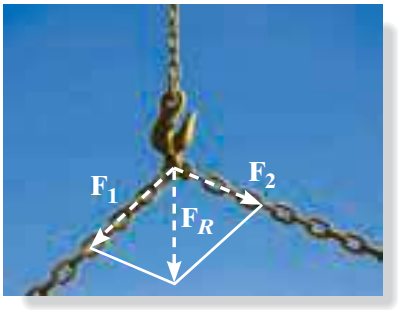

The parallelogram law must be used to determine the resultant of the two forces acting on the hook. (© Russell C. Hibbeler)

Experimental evidence has shown that a force is a vector quantity since it has a specified magnitude, direction, and sense and it adds according to the parallelogram law. Two common problems in statics involve either finding the resultant force, knowing its components, or resolving a known force into two components. We will now describe how each of these problems is solved using the parallelogram law.

Finding a Resultant Force. The two component forces $\mathbf{F}_1$ and $\mathbf{F}_2$ acting on the pin in Fig. 2–7*a* can be added together to form the resultant force $\mathbf{F}_R = \mathbf{F}_1 + \mathbf{F}_2$, as shown in Fig. 2–7*b*. From this construction, or using the triangle rule, Fig. 2–7*c*, we can apply the law of cosines or the law of sines to the triangle in order to obtain the magnitude of the resultant force and its direction.

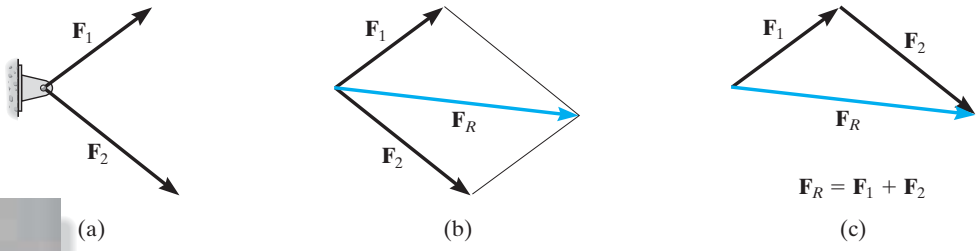

(a) (b) (c)

Fig. 2–7

Using the parallelogram law the supporting force $\mathbf{F}$ can be resolved into components acting along the u and v axes. (© Russell C. Hibbeler)

Finding the Components of a Force. Sometimes it is necessary to resolve a force into two *components* in order to study its pulling or pushing effect in two specific directions. For example, in Fig. 2–8*a*, $\mathbf{F}$ is to be resolved into two components along the two members, defined by the u and v axes. In order to determine the magnitude of each component, a parallelogram is constructed first, by drawing lines starting from the tip of $\mathbf{F}$, one line parallel to u, and the other line parallel to v. These lines then intersect with the v and u axes, forming a parallelogram. The force components $\mathbf{F}_u$ and $\mathbf{F}_v$ are then established by simply joining the tail of $\mathbf{F}$ to the intersection points on the u and v axes, Fig. 2–8*b*. This parallelogram can then be reduced to a triangle, which represents the triangle rule, Fig. 2–8*c*. From this, the law of sines can then be applied to determine the unknown magnitudes of the components.

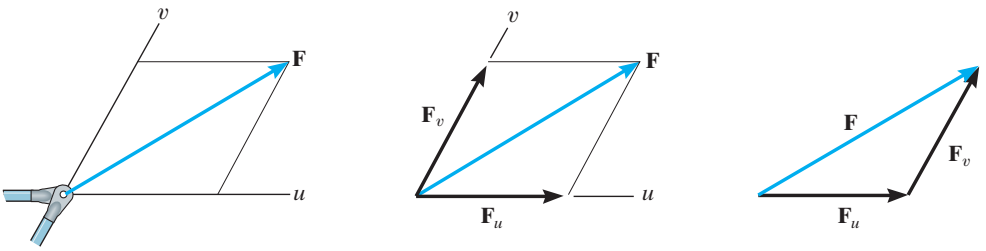

Fig. 2–8

Addition of Several Forces. If more than two forces are to be added, successive applications of the parallelogram law can be carried out in order to obtain the resultant force. For example, if three forces $\mathbf{F}_1$, $\mathbf{F}_2$, $\mathbf{F}_3$ act at a point O, Fig. 2–9, the resultant of any two of the forces is found, say, $\mathbf{F}_1 + \mathbf{F}_2$—and then this resultant is added to the third force, yielding the resultant of all three forces; i.e., $\mathbf{F}_R = (\mathbf{F}_1 + \mathbf{F}_2) + \mathbf{F}_3$. Using the parallelogram law to add more than two forces, as shown here, often requires extensive geometric and trigonometric calculation to determine the numerical values for the magnitude and direction of the resultant. Instead, problems of this type are easily solved by using the "rectangular-component method," which is explained in Sec. 2.4.

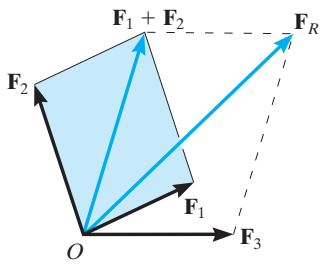

Fig. 2–9

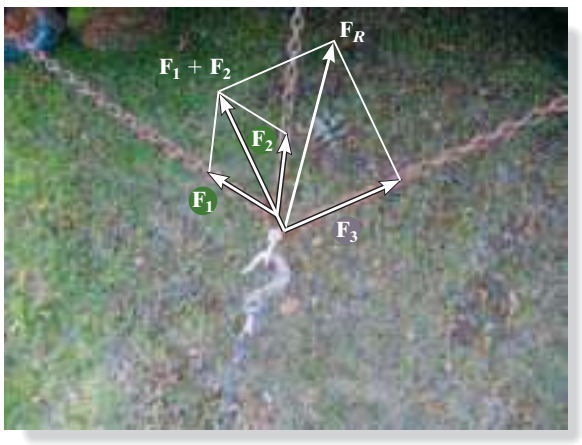

The resultant force $\mathbf{F}_R$ on the hook requires the addition of $\mathbf{F}_1 + \mathbf{F}_2$, then this resultant is added to $\mathbf{F}_3$. (© Russell C. Hibbeler)

Important Points

- A scalar is a positive or negative number.
- A vector is a quantity that has a magnitude, direction, and sense.
- Multiplication or division of a vector by a scalar will change the magnitude of the vector. The sense of the vector will change if the scalar is negative.
- As a special case, if the vectors are collinear, the resultant is formed by an algebraic or scalar addition.

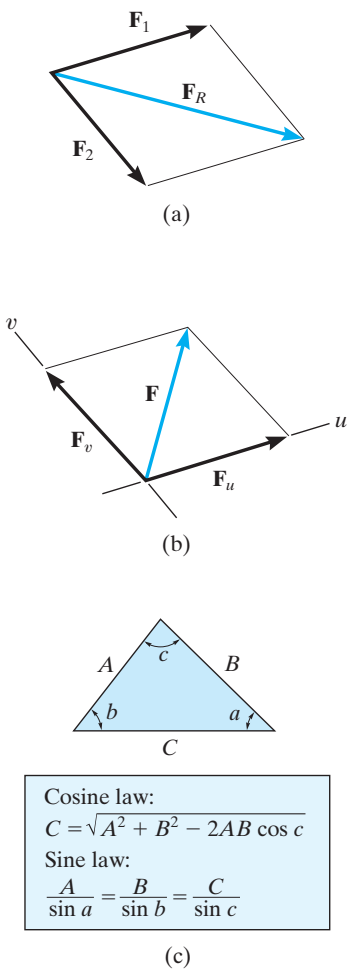

Fig. 2–10

Procedure for Analysis

Problems that involve the addition of two forces can be solved as follows:

Parallelogram Law.

- Two "component" forces $\mathbf{F}_1$ and $\mathbf{F}_2$ in Fig. 2–10*a* add according to the parallelogram law, yielding a *resultant* force $\mathbf{F}_R$ that forms the diagonal of the parallelogram.
- If a force $\mathbf{F}$ is to be resolved into *components* along two axes u and v, Fig. 2–10*b*, then start at the head of force $\mathbf{F}$ and construct lines parallel to the axes, thereby forming the parallelogram. The sides of the parallelogram represent the components, $\mathbf{F}_u$ and $\mathbf{F}_v$.
- Label all the known and unknown force magnitudes and the angles on the sketch and identify the two unknowns as the magnitude and direction of $\mathbf{F}_R$, or the magnitudes of its components.

Trigonometry.

- Redraw a half portion of the parallelogram to illustrate the triangular head-to-tail addition of the components.
- From this triangle, the magnitude of the resultant force can be determined using the law of cosines, and its direction is determined from the law of sines. The magnitudes of two force components are determined from the law of sines. The formulas are given in Fig. 2–10*c*.

EXAMPLE 2.1

The screw eye in Fig. 2–11*a* is subjected to two forces, $\mathbf{F}_1$ and $\mathbf{F}_2$. Determine the magnitude and direction of the resultant force.

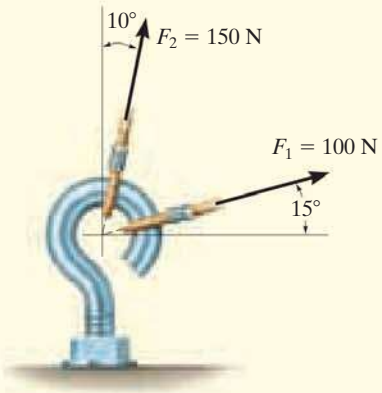

(a)

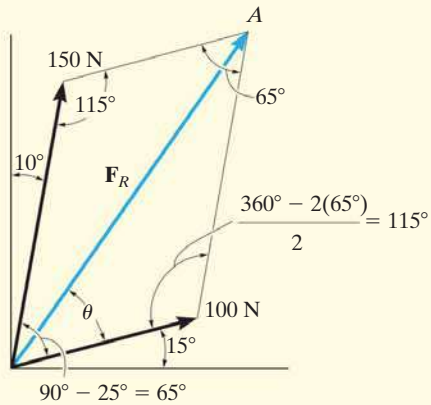

(b)

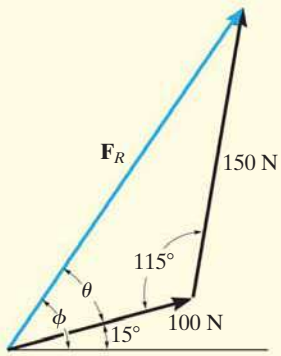

(c)

Fig. 2–11

SOLUTION

Parallelogram Law. The parallelogram is formed by drawing a line from the head of $\mathbf{F}_1$ that is parallel to $\mathbf{F}_2$, and another line from the head of $\mathbf{F}_2$ that is parallel to $\mathbf{F}_1$. The resultant force $\mathbf{F}_R$ extends to where these lines intersect at point A, Fig. 2–11*b*. The two unknowns are the magnitude of $\mathbf{F}_R$ and the angle θ (theta).

Trigonometry. From the parallelogram, the vector triangle is constructed, Fig. 2–11*c*. Using the law of cosines

$$F_R = \sqrt{(100\text{ N})^2 + (150\text{ N})^2 - 2(100\text{ N})(150\text{ N})\cos 115°}$$
$$= \sqrt{10\,000 + 22\,500 - 30\,000(-0.4226)} = 212.6\text{ N}$$
$$= 213\text{ N} \qquad \textit{Ans.}$$

Applying the law of sines to determine θ,

$$\frac{150\text{ N}}{\sin\theta} = \frac{212.6\text{ N}}{\sin 115°} \qquad \sin\theta = \frac{150\text{ N}}{212.6\text{ N}}(\sin 115°)$$
$$\theta = 39.8°$$

Thus, the direction ϕ (phi) of $\mathbf{F}_R$, measured from the horizontal, is

$$\phi = 39.8° + 15.0° = 54.8° \qquad \textit{Ans.}$$

NOTE: The results seem reasonable, since Fig. 2–11*b* shows $\mathbf{F}_R$ to have a magnitude larger than its components and a direction that is between them.

EXAMPLE 2.2

Resolve the horizontal 600-lb force in Fig. 2–12*a* into components acting along the *u* and *v* axes and determine the magnitudes of these components.

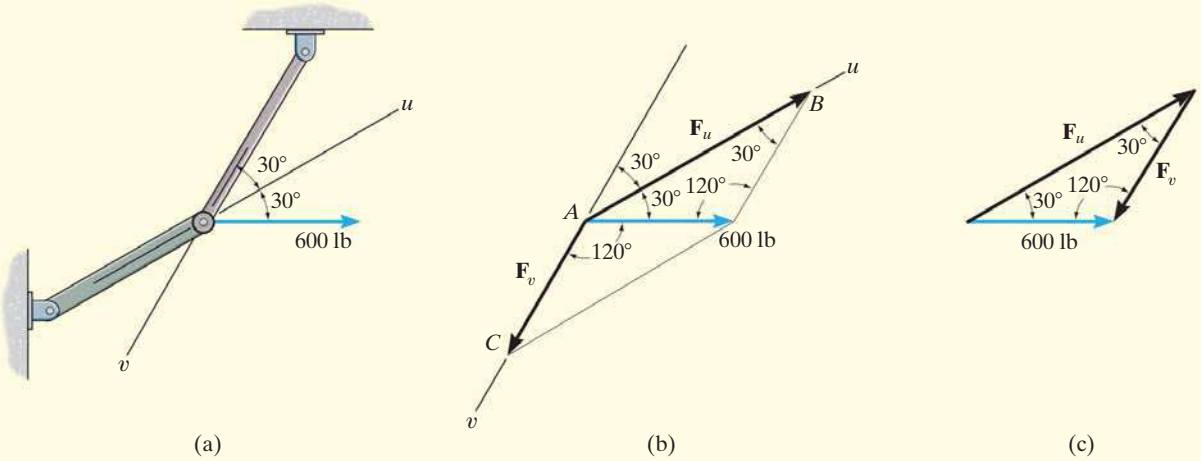

Fig. 2–12

SOLUTION

The parallelogram is constructed by extending a line from the *head* of the 600-lb force parallel to the *v* axis until it intersects the *u* axis at point *B*, Fig. 2–12*b*. The arrow from *A* to *B* represents $\mathbf{F}_u$. Similarly, the line extended from the head of the 600-lb force drawn parallel to the *u* axis intersects the *v* axis at point *C*, which gives $\mathbf{F}_v$.

The vector addition using the triangle rule is shown in Fig. 2–12*c*. The two unknowns are the magnitudes of $\mathbf{F}_u$ and $\mathbf{F}_v$. Applying the law of sines,

$$\frac{F_u}{\sin 120^\circ} = \frac{600 \text{ lb}}{\sin 30^\circ}$$

$$F_u = 1039 \text{ lb} \qquad \textit{Ans.}$$

$$\frac{F_v}{\sin 30^\circ} = \frac{600 \text{ lb}}{\sin 30^\circ}$$

$$F_v = 600 \text{ lb} \qquad \textit{Ans.}$$

NOTE: The result for F_u shows that sometimes a component can have a greater magnitude than the resultant.

EXAMPLE 2.3

Determine the magnitude of the component force **F** in Fig. 2–13*a* and the magnitude of the resultant force $\mathbf{F}_R$ if $\mathbf{F}_R$ is directed along the positive *y* axis.

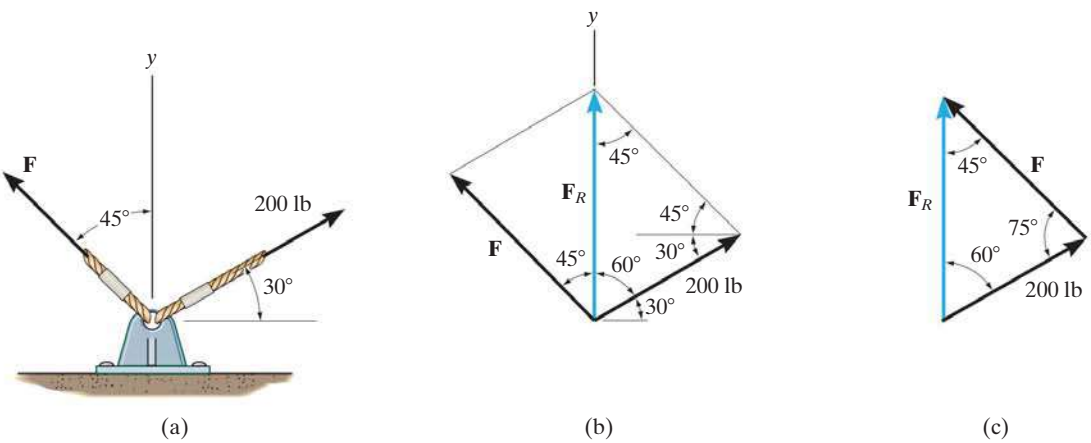

Fig. 2–13

SOLUTION

The parallelogram law of addition is shown in Fig. 2–13*b*, and the triangle rule is shown in Fig. 2–13*c*. The magnitudes of $\mathbf{F}_R$ and **F** are the two unknowns. They can be determined by applying the law of sines.

$$\frac{F}{\sin 60^\circ} = \frac{200 \text{ lb}}{\sin 45^\circ}$$

$$F = 245 \text{ lb} \qquad \textit{Ans.}$$

$$\frac{F_R}{\sin 75^\circ} = \frac{200 \text{ lb}}{\sin 45^\circ}$$

$$F_R = 273 \text{ lb} \qquad \textit{Ans.}$$

EXAMPLE 2.4

It is required that the resultant force acting on the eyebolt in Fig. 2–14*a* be directed along the positive x axis and that $\mathbf{F}_2$ have a *minimum* magnitude. Determine this magnitude, the angle θ, and the corresponding resultant force.

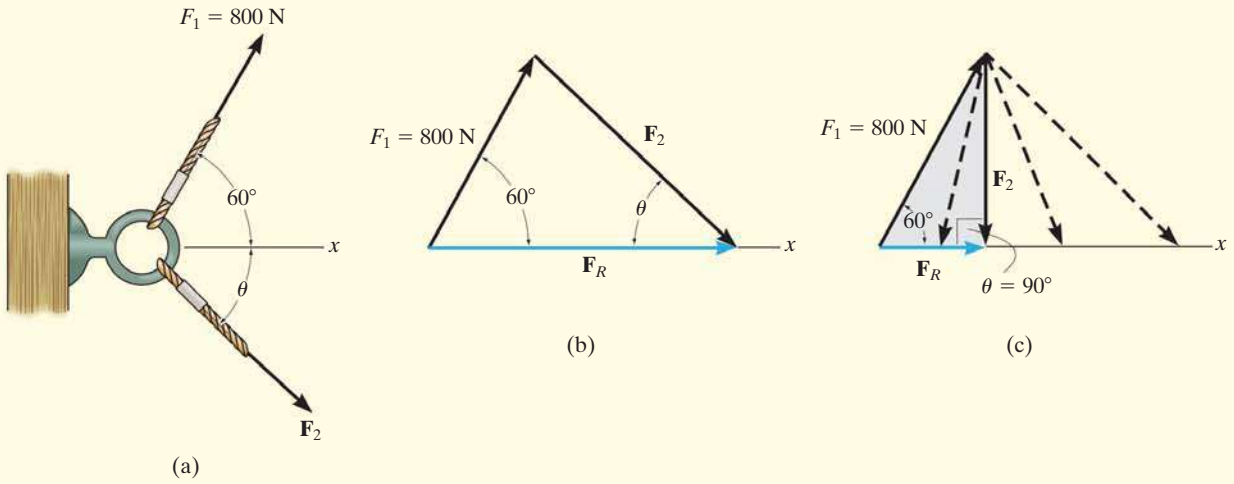

Fig. 2–14

SOLUTION

The triangle rule for $\mathbf{F}_R = \mathbf{F}_1 + \mathbf{F}_2$ is shown in Fig. 2–14*b*. Since the magnitudes (lengths) of $\mathbf{F}_R$ and $\mathbf{F}_2$ are not specified, then $\mathbf{F}_2$ can actually be any vector that has its head touching the line of action of $\mathbf{F}_R$, Fig. 2–14*c*. However, as shown, the magnitude of $\mathbf{F}_2$ is a *minimum* or the shortest length when its line of action is *perpendicular* to the line of action of $\mathbf{F}_R$, that is, when

$$\theta = 90° \qquad \textit{Ans.}$$

Since the vector addition now forms the shaded right triangle, the two unknown magnitudes can be obtained by trigonometry.

$$F_R = (800\text{ N})\cos 60° = 400\text{ N} \qquad \textit{Ans.}$$

$$F_2 = (800\text{ N})\sin 60° = 693\text{ N} \qquad \textit{Ans.}$$

It is strongly suggested that you test yourself on the solutions to these examples, by covering them over and then trying to draw the parallelogram law, and thinking about how the sine and cosine laws are used to determine the unknowns. Then before solving any of the problems, try to solve the Preliminary Problems and some of the Fundamental Problems given on the next pages. The solutions and answers to these are given in the back of the book. Doing this throughout the book will help immensely in developing your problem-solving skills.

PRELIMINARY PROBLEMS

Partial solutions and answers to all Preliminary Problems are given in the back of the book.

P2–1. In each case, construct the parallelogram law to show $\mathbf{F}_R = \mathbf{F}_1 + \mathbf{F}_2$. Then establish the triangle rule, where $\mathbf{F}_R = \mathbf{F}_1 + \mathbf{F}_2$. Label all known and unknown sides and internal angles.

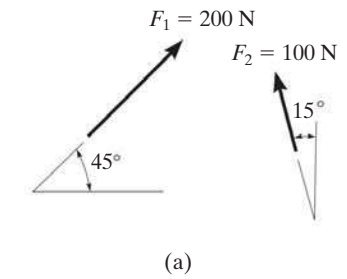

(a)

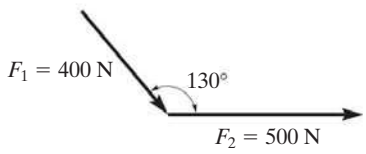

(b)

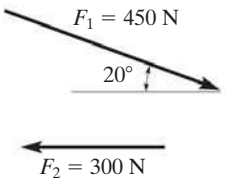

(c)

Prob. P2–1

P2–2. In each case, show how to resolve the force $\mathbf{F}$ into components acting along the u and v axes using the parallelogram law. Then establish the triangle rule to show $\mathbf{F}_R = \mathbf{F}_u + \mathbf{F}_v$. Label all known and unknown sides and interior angles.

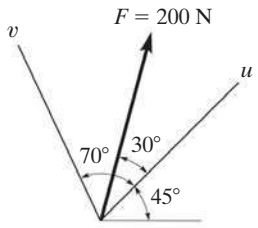

(a)

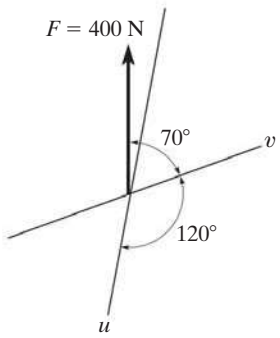

(b)

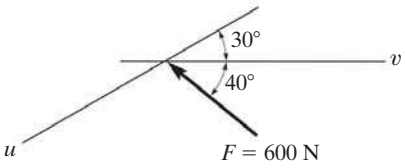

(c)

Prob. P2–2

FUNDAMENTAL PROBLEMS

Partial solutions and answers to all Fundamental Problems are given in the back of the book.

F2–1. Determine the magnitude of the resultant force acting on the screw eye and its direction measured clockwise from the x axis.

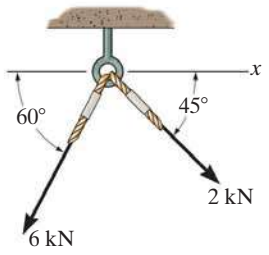

Prob. F2–1

F2–2. Two forces act on the hook. Determine the magnitude of the resultant force.

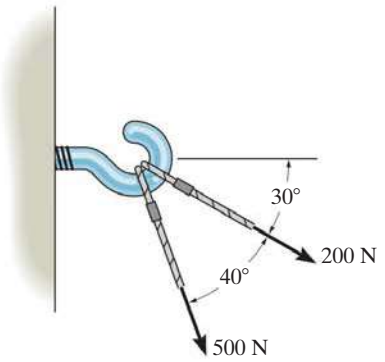

Prob. F2–2

F2–3. Determine the magnitude of the resultant force and its direction measured counterclockwise from the positive x axis.

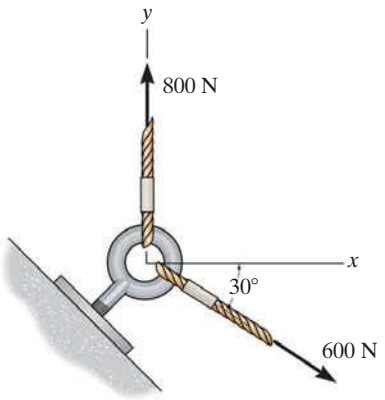

Prob. F2–3

F2–4. Resolve the 30-lb force into components along the u and v axes, and determine the magnitude of each of these components.

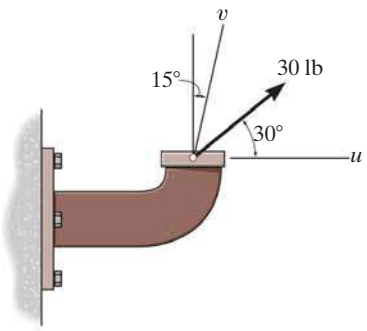

Prob. F2–4

F2–5. The force $F = 450$ lb acts on the frame. Resolve this force into components acting along members AB and AC, and determine the magnitude of each component.

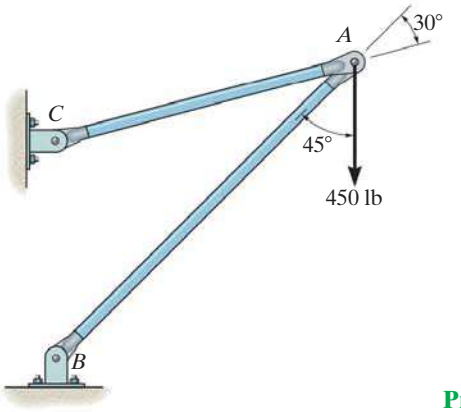

Prob. F2–5

F2–6. If force **F** is to have a component along the u axis of $F_u = 6$ kN, determine the magnitude of **F** and the magnitude of its component $\mathbf{F}_v$ along the v axis.

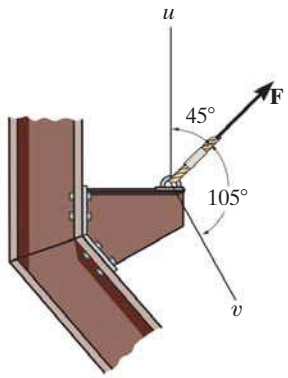

Prob. F2–6

2–1. If $\theta = 60°$ and $F = 450$ N, determine the magnitude of the resultant force and its direction, measured counterclockwise from the positive x axis.

2–2. If the magnitude of the resultant force is to be 500 N, directed along the positive y axis, determine the magnitude of force **F** and its direction θ.

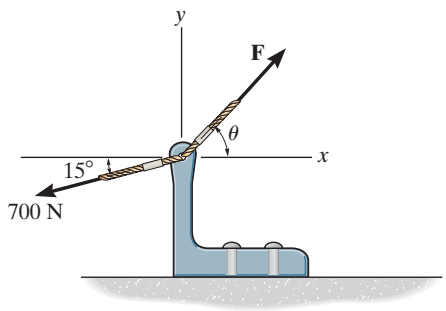

Probs. 2–1/2

2–3. Determine the magnitude of the resultant force $\mathbf{F}_R = \mathbf{F}_1 + \mathbf{F}_2$ and its direction, measured counterclockwise from the positive x axis.

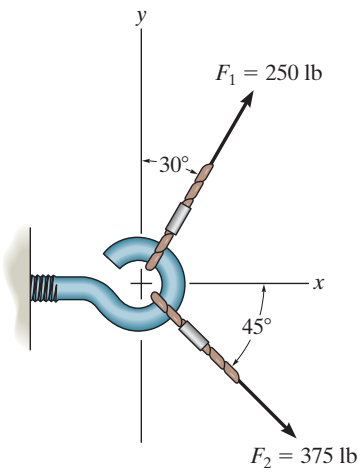

Prob. 2–3

***2–4.** The vertical force **F** acts downward at A on the two-membered frame. Determine the magnitudes of the two components of **F** directed along the axes of AB and AC. Set $F = 500$ N.

2–5. Solve Prob. 2–4 with $F = 350$ lb.

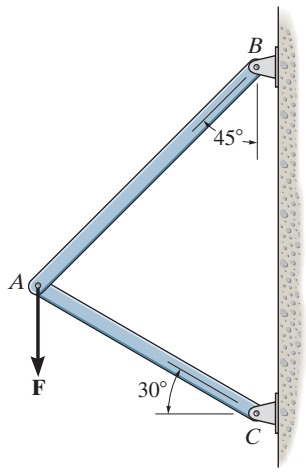

Probs. 2–4/5

2–6. Determine the magnitude of the resultant force $\mathbf{F}_R = \mathbf{F}_1 + \mathbf{F}_2$ and its direction, measured clockwise from the positive u axis.

2–7. Resolve the force $\mathbf{F}_1$ into components acting along the u and v axes and determine the magnitudes of the components.

***2–8.** Resolve the force $\mathbf{F}_2$ into components acting along the u and v axes and determine the magnitudes of the components.

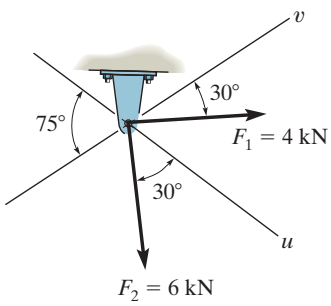

Probs. 2–6/7/8

2–9. If the resultant force acting on the support is to be 1200 lb, directed horizontally to the right, determine the force **F** in rope A and the corresponding angle θ.

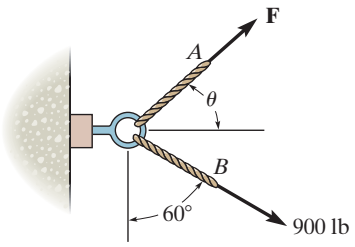

Prob. 2–9

2–10. Determine the magnitude of the resultant force and its direction, measured counterclockwise from the positive x axis.

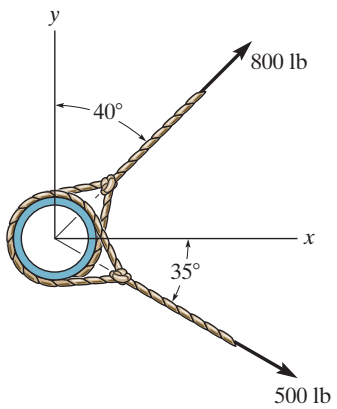

Prob. 2–10

2–11. The plate is subjected to the two forces at A and B as shown. If $\theta = 60°$, determine the magnitude of the resultant of these two forces and its direction measured clockwise from the horizontal.

***2–12.** Determine the angle θ for connecting member A to the plate so that the resultant force of $\mathbf{F}_A$ and $\mathbf{F}_B$ is directed horizontally to the right. Also, what is the magnitude of the resultant force?

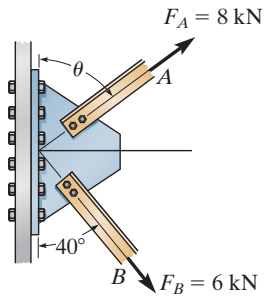

Probs. 2–11/12

2–13. The force acting on the gear tooth is $F = 20$ lb. Resolve this force into two components acting along the lines aa and bb.

2–14. The component of force **F** acting along line aa is required to be 30 lb. Determine the magnitude of **F** and its component along line bb.

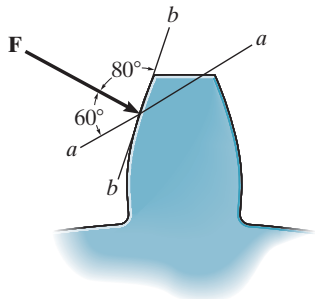

Probs. 2–13/14

2–15. Force **F** acts on the frame such that its component acting along member AB is 650 lb, directed from B towards A, and the component acting along member BC is 500 lb, directed from B towards C. Determine the magnitude of **F** and its direction θ. Set $\phi = 60°$.

***2–16.** Force **F** acts on the frame such that its component acting along member AB is 650 lb, directed from B towards A. Determine the required angle ϕ ($0° \leq \phi \leq 45°$) and the component acting along member BC. Set $F = 850$ lb and $\theta = 30°$.

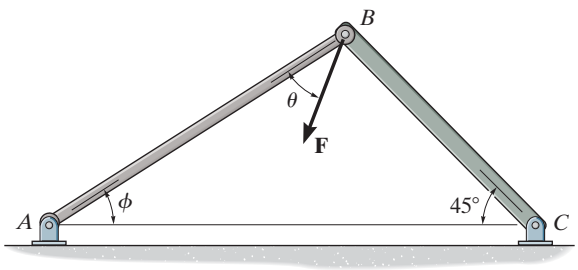

Probs. 2–15/16

2–17. Determine the magnitude and direction of the resultant $\mathbf{F}_R = \mathbf{F}_1 + \mathbf{F}_2 + \mathbf{F}_3$ of the three forces by first finding the resultant $\mathbf{F}' = \mathbf{F}_1 + \mathbf{F}_2$ and then forming $\mathbf{F}_R = \mathbf{F}' + \mathbf{F}_3$.

2–18. Determine the magnitude and direction of the resultant $\mathbf{F}_R = \mathbf{F}_1 + \mathbf{F}_2 + \mathbf{F}_3$ of the three forces by first finding the resultant $\mathbf{F}' = \mathbf{F}_2 + \mathbf{F}_3$ and then forming $\mathbf{F}_R = \mathbf{F}' + \mathbf{F}_1$.

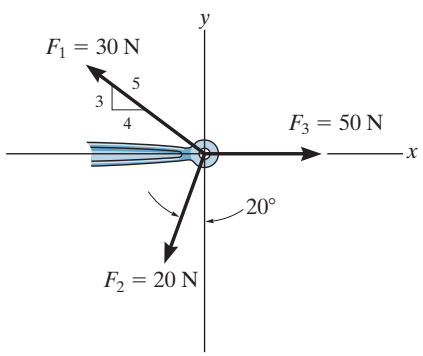

Probs. 2–17/18

2–19. Determine the design angle θ ($0° \leq \theta \leq 90°$) for strut AB so that the 400-lb horizontal force has a component of 500 lb directed from A towards C. What is the component of force acting along member AB? Take $\phi = 40°$.

***2–20.** Determine the design angle ϕ ($0° \leq \phi \leq 90°$) between struts AB and AC so that the 400-lb horizontal force has a component of 600 lb which acts up to the left, in the same direction as from B towards A. Take $\theta = 30°$.

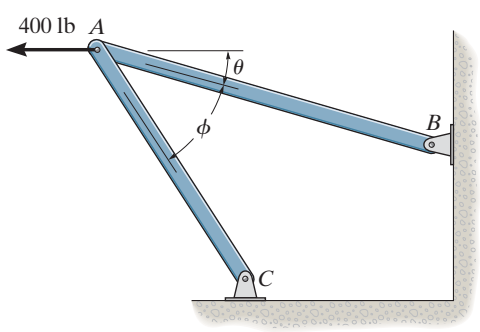

Probs. 2–19/20

2–21. Determine the magnitude and direction of the resultant force, $\mathbf{F}_R$ measured counterclockwise from the positive x axis. Solve the problem by first finding the resultant $\mathbf{F}' = \mathbf{F}_1 + \mathbf{F}_2$ and then forming $\mathbf{F}_R = \mathbf{F}' + \mathbf{F}_3$.

2–22. Determine the magnitude and direction of the resultant force, measured counterclockwise from the positive x axis. Solve l by first finding the resultant $\mathbf{F}' = \mathbf{F}_2 + \mathbf{F}_3$ and then forming $\mathbf{F}_R = \mathbf{F}' + \mathbf{F}_1$.

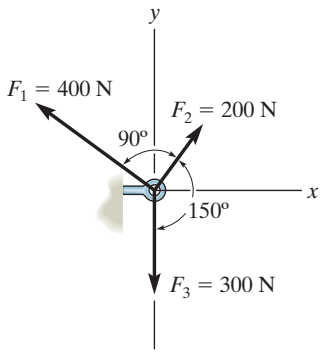

Probs. 2–21/22

2–23. Two forces act on the screw eye. If $F_1 = 400$ N and $F_2 = 600$ N, determine the angle θ ($0° \leq \theta \leq 180°$) between them, so that the resultant force has a magnitude of $F_R = 800$ N.

***2–24.** Two forces $\mathbf{F}_1$ and $\mathbf{F}_2$ act on the screw eye. If their lines of action are at an angle θ apart and the magnitude of each force is $F_1 = F_2 = F$, determine the magnitude of the resultant force $\mathbf{F}_R$ and the angle between $\mathbf{F}_R$ and $\mathbf{F}_1$.

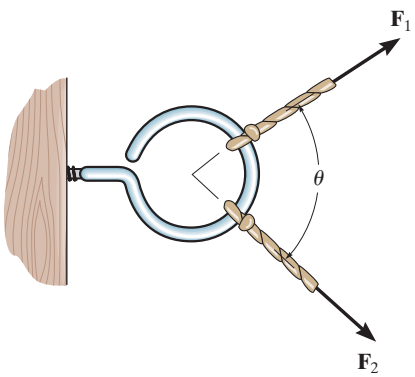

Probs. 2–23/24

2–25. If $F_1 = 30$ lb and $F_2 = 40$ lb, determine the angles θ and ϕ so that the resultant force is directed along the positive x axis and has a magnitude of $F_R = 60$ lb.

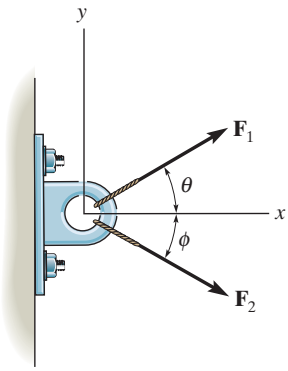

Prob. 2–25

2–26. Determine the magnitude and direction θ of $\mathbf{F}_A$ so that the resultant force is directed along the positive x axis and has a magnitude of 1250 N.

2–27. Determine the magnitude and direction, measured counterclockwise from the positive x axis, of the resultant force acting on the ring at O, if $F_A = 750$ N and $\theta = 45°$.

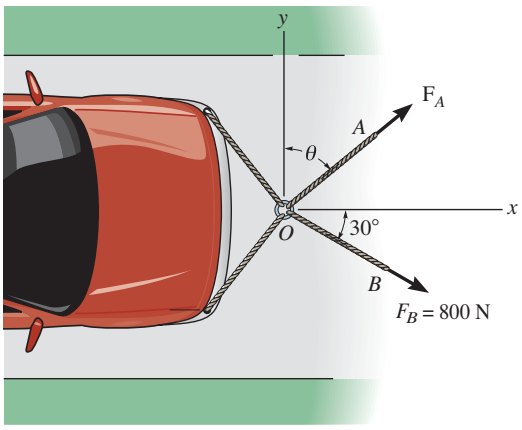

Probs. 2–26/27

***2–28.** Determine the magnitude of force $\mathbf{F}$ so that the resultant $\mathbf{F}_R$ of the three forces is as small as possible. What is the minimum magnitude of $\mathbf{F}_R$?

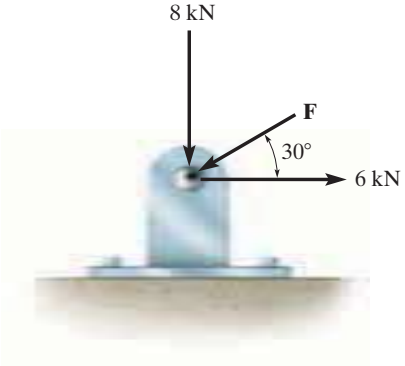

Prob. 2–28

2–29. If the resultant force of the two tugboats is 3 kN, directed along the positive x axis, determine the required magnitude of force $\mathbf{F}_B$ and its direction θ.

2–30. If $\mathbf{F}_B = 3$ kN and $\theta = 45°$, determine the magnitude of the resultant force of the two tugboats and its direction measured clockwise form the positive x axis.

2–31. If the resultant force of the two tugboats is required to be directed towards the positive x axis, and $\mathbf{F}_B$ is to be a minimum, determine the magnitude of $\mathbf{F}_R$ and $\mathbf{F}_B$ and the angle θ.

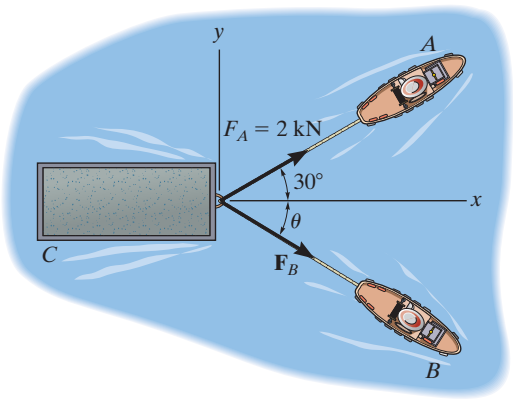

Probs. 2–29/30/31

2.4 Addition of a System of Coplanar Forces

When a force is resolved into two components along the x and y axes, the components are then called ***rectangular components***. For analytical work we can represent these components in one of two ways, using either scalar or Cartesian vector notation.

Scalar Notation. The rectangular components of force **F** shown in Fig. 2–15*a* are found using the parallelogram law, so that $\mathbf{F} = \mathbf{F}_x + \mathbf{F}_y$. Because these components form a right triangle, they can be determined from

$$F_x = F\cos\theta \qquad \text{and} \qquad F_y = F\sin\theta$$

Instead of using the angle θ, however, the direction of **F** can also be defined using a small "slope" triangle, as in the example shown in Fig. 2–15*b*. Since this triangle and the larger shaded triangle are similar, the proportional length of the sides gives

$$\frac{F_x}{F} = \frac{a}{c}$$

or

$$F_x = F\left(\frac{a}{c}\right)$$

and

$$\frac{F_y}{F} = \frac{b}{c}$$

or

$$F_y = -F\left(\frac{b}{c}\right)$$

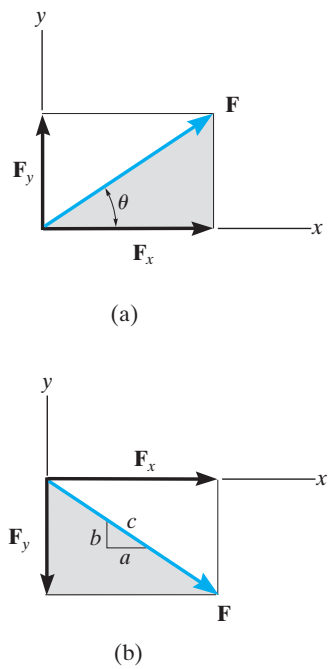

Fig. 2–15

Here the y component is a *negative scalar* since $\mathbf{F}_y$ is directed along the negative y axis.

It is important to keep in mind that this positive and negative scalar notation is to be used only for computational purposes, not for graphical representations in figures. Throughout the book, the *head of a vector arrow* in *any figure* indicates the sense of the vector *graphically*; algebraic signs are not used for this purpose. Thus, the vectors in Figs. 2–15*a* and 2–15*b* are designated by using boldface (vector) notation.* Whenever italic symbols are written near vector arrows in figures, they indicate the *magnitude* of the vector, which is *always* a *positive* quantity.

*Negative signs are used only in figures with boldface notation when showing equal but opposite pairs of vectors, as in Fig. 2–2.

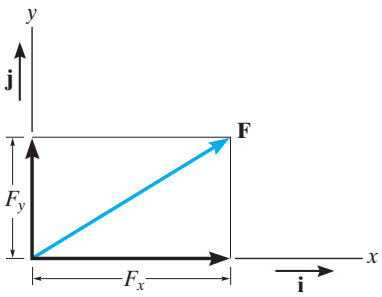

Fig. 2–16

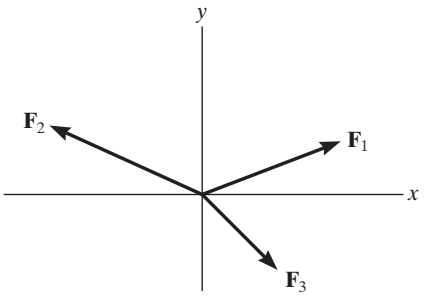

(a)

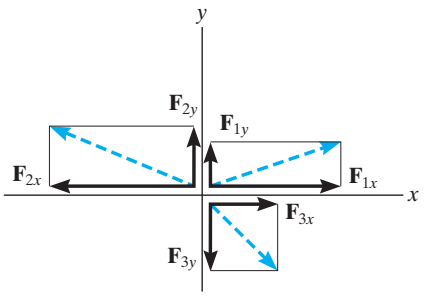

(b)

Fig. 2–17

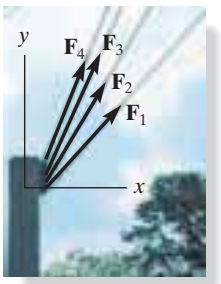

The resultant force of the four cable forces acting on the post can be determined by adding algebraically the separate x and y components of each cable force. This resultant $\mathbf{F}_R$ produces the *same pulling effect* on the post as all four cables. (© Russell C. Hibbeler)

Cartesian Vector Notation. It is also possible to represent the x and y components of a force in terms of Cartesian unit vectors **i** and **j**. They are called unit vectors because they have a dimensionless magnitude of 1, and so they can be used to designate the *directions* of the x and y axes, respectively, Fig. 2–16.*

Since the *magnitude* of each component of **F** is *always a positive quantity*, which is represented by the (positive) scalars F_x and F_y, then we can express **F** as a ***Cartesian vector***,

$$\mathbf{F} = F_x\,\mathbf{i} + F_y\,\mathbf{j}$$

Coplanar Force Resultants. We can use either of the two methods just described to determine the resultant of several ***coplanar forces***, i.e., forces that all lie in the same plane. To do this, each force is first resolved into its x and y components, and then the respective components are added using *scalar algebra* since they are collinear. The resultant force is then formed by adding the resultant components using the parallelogram law. For example, consider the three concurrent forces in Fig. 2–17*a*, which have x and y components shown in Fig. 2–17*b*. Using Cartesian vector notation, each force is first represented as a Cartesian vector, i.e.,

$$\begin{aligned}\mathbf{F}_1 &= F_{1x}\,\mathbf{i} + F_{1y}\,\mathbf{j}\\ \mathbf{F}_2 &= -F_{2x}\,\mathbf{i} + F_{2y}\,\mathbf{j}\\ \mathbf{F}_3 &= F_{3x}\,\mathbf{i} - F_{3y}\,\mathbf{j}\end{aligned}$$

The vector resultant is therefore

$$\begin{aligned}\mathbf{F}_R &= \mathbf{F}_1 + \mathbf{F}_2 + \mathbf{F}_3\\ &= F_{1x}\,\mathbf{i} + F_{1y}\,\mathbf{j} - F_{2x}\,\mathbf{i} + F_{2y}\,\mathbf{j} + F_{3x}\,\mathbf{i} - F_{3y}\,\mathbf{j}\\ &= (F_{1x} - F_{2x} + F_{3x})\mathbf{i} + (F_{1y} + F_{2y} - F_{3y})\mathbf{j}\\ &= (F_{Rx})\mathbf{i} + (F_{Ry})\mathbf{j}\end{aligned}$$

If *scalar notation* is used, then indicating the positive directions of components along the x and y axes with symbolic arrows, we have

$$\begin{aligned}\overset{+}{\rightarrow}\quad (F_R)_x &= F_{1x} - F_{2x} + F_{3x}\\ +\uparrow\quad (F_R)_y &= F_{1y} + F_{2y} - F_{3y}\end{aligned}$$

These are the *same* results as the **i** and **j** components of $\mathbf{F}_R$ determined above.

*For handwritten work, unit vectors are usually indicated using a circumflex, e.g., $\hat{i}$ and $\hat{j}$. Also, realize that F_x and F_y in Fig. 2–16 represent the *magnitudes* of the components, which are *always positive scalars*. The directions are defined by **i** and **j**. If instead we used scalar notation, then F_x and F_y could be positive or negative scalars, since they would account for *both* the magnitude and direction of the components.

We can represent the components of the resultant force of any number of coplanar forces symbolically by the algebraic sum of the x and y components of all the forces, i.e.,

$$\boxed{\begin{aligned}(F_R)_x &= \Sigma F_x \\ (F_R)_y &= \Sigma F_y\end{aligned}} \qquad (2\text{–}1)$$

Once these components are determined, they may be sketched along the x and y axes with their proper sense of direction, and the resultant force can be determined from vector addition, as shown in Fig. 2–17c. From this sketch, the magnitude of $\mathbf{F}_R$ is then found from the Pythagorean theorem; that is,

$$F_R = \sqrt{(F_R)_x^2 + (F_R)_y^2}$$

Also, the angle θ, which specifies the direction of the resultant force, is determined from trigonometry:

$$\theta = \tan^{-1}\left|\frac{(F_R)_y}{(F_R)_x}\right|$$

The above concepts are illustrated numerically in the examples which follow.

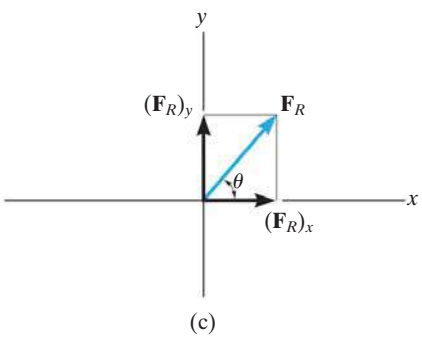

Fig. 2–17 (cont.)

Important Points

- The resultant of several coplanar forces can easily be determined if an x, y coordinate system is established and the forces are resolved along the axes.
- The direction of each force is specified by the angle its line of action makes with one of the axes, or by a slope triangle.
- The orientation of the x and y axes is arbitrary, and their positive direction can be specified by the Cartesian unit vectors **i** and **j**.
- The x and y components of the *resultant force* are simply the algebraic addition of the components of all the coplanar forces.
- The magnitude of the resultant force is determined from the Pythagorean theorem, and when the resultant components are sketched on the x and y axes, Fig. 2–17c, the direction θ can be determined from trigonometry.

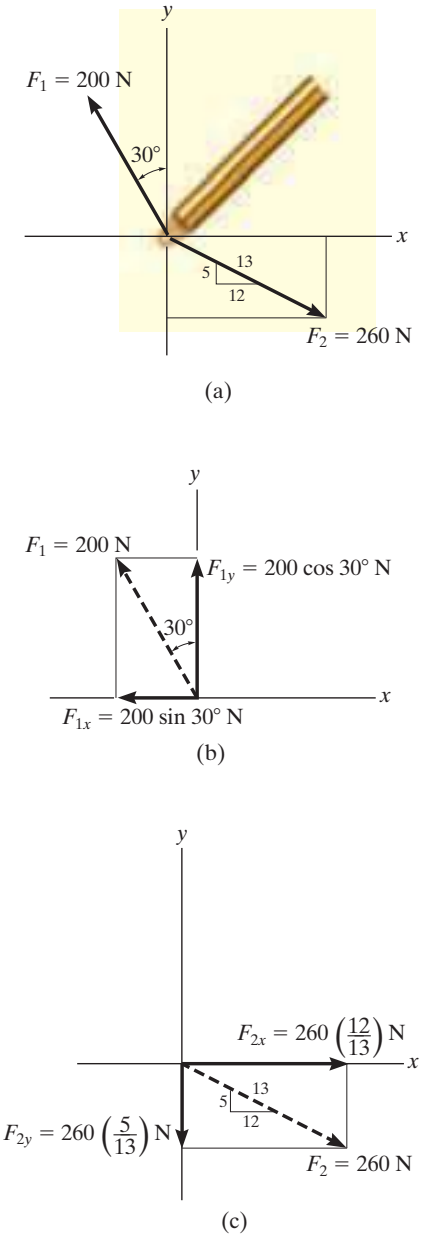

Fig. 2–18

Determine the x and y components of $\mathbf{F}_1$ and $\mathbf{F}_2$ acting on the boom shown in Fig. 2–18*a*. Express each force as a Cartesian vector.

SOLUTION

Scalar Notation. By the parallelogram law, $\mathbf{F}_1$ is resolved into x and y components, Fig. 2–18*b*. Since $\mathbf{F}_{1x}$ acts in the $-x$ direction, and $\mathbf{F}_{1y}$ acts in the $+y$ direction, we have

$$F_{1x} = -200 \sin 30° \text{ N} = -100 \text{ N} = 100 \text{ N} \leftarrow \qquad \textit{Ans.}$$

$$F_{1y} = 200 \cos 30° \text{ N} = 173 \text{ N} = 173 \text{ N} \uparrow \qquad \textit{Ans.}$$

The force $\mathbf{F}_2$ is resolved into its x and y components, as shown in Fig. 2–18*c*. Here the *slope* of the line of action for the force is indicated. From this "slope triangle" we could obtain the angle θ, e.g., $\theta = \tan^{-1}\left(\frac{5}{12}\right)$, and then proceed to determine the magnitudes of the components in the same manner as for $\mathbf{F}_1$. The easier method, however, consists of using proportional parts of similar triangles, i.e.,

$$\frac{F_{2x}}{260 \text{ N}} = \frac{12}{13} \qquad F_{2x} = 260 \text{ N}\left(\frac{12}{13}\right) = 240 \text{ N}$$

Similarly,

$$F_{2y} = 260 \text{ N}\left(\frac{5}{13}\right) = 100 \text{ N}$$

Notice how the magnitude of the *horizontal component*, $\mathbf{F}_{2x}$, was obtained by multiplying the force magnitude by the ratio of the *horizontal leg* of the slope triangle divided by the hypotenuse; whereas the magnitude of the *vertical component*, F_{2y}, was obtained by multiplying the force magnitude by the ratio of the *vertical leg* divided by the hypotenuse. Hence, using scalar notation to represent these components, we have

$$F_{2x} = 240 \text{ N} = 240 \text{ N} \rightarrow \qquad \textit{Ans.}$$

$$F_{2y} = -100 \text{ N} = 100 \text{ N} \downarrow \qquad \textit{Ans.}$$

Cartesian Vector Notation. Having determined the magnitudes and directions of the components of each force, we can express each force as a Cartesian vector.

$$\mathbf{F}_1 = \{-100\mathbf{i} + 173\mathbf{j}\}\text{N} \qquad \textit{Ans.}$$

$$\mathbf{F}_2 = \{240\mathbf{i} - 100\mathbf{j}\}\text{N} \qquad \textit{Ans.}$$

EXAMPLE 2.6

The link in Fig. 2–19*a* is subjected to two forces $\mathbf{F}_1$ and $\mathbf{F}_2$. Determine the magnitude and direction of the resultant force.

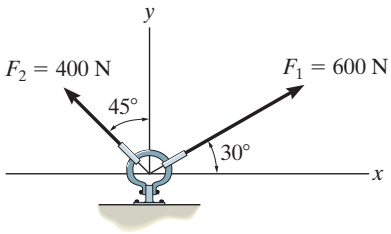

(a)

SOLUTION I

Scalar Notation. First we resolve each force into its x and y components, Fig. 2–19*b*, then we sum these components algebraically.

$$\overset{+}{\rightarrow}(F_R)_x = \Sigma F_x; \qquad (F_R)_x = 600\cos 30°\text{ N} - 400\sin 45°\text{ N} = 236.8\text{ N}\rightarrow$$

$$+\uparrow(F_R)_y = \Sigma F_y; \qquad (F_R)_y = 600\sin 30°\text{ N} + 400\cos 45°\text{ N} = 582.8\text{ N}\uparrow$$

The resultant force, shown in Fig. 2–19*c*, has a *magnitude* of

$$F_R = \sqrt{(236.8\text{ N})^2 + (582.8\text{ N})^2} = 629\text{ N} \qquad \textit{Ans.}$$

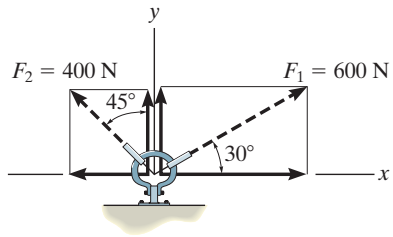

(b)

From the vector addition,

$$\theta = \tan^{-1}\left(\frac{582.8\text{ N}}{236.8\text{ N}}\right) = 67.9° \qquad \textit{Ans.}$$

SOLUTION II

Cartesian Vector Notation. From Fig. 2–19*b*, each force is first expressed as a Cartesian vector.

$$\mathbf{F}_1 = \{600\cos 30°\mathbf{i} + 600\sin 30°\mathbf{j}\}\text{ N}$$
$$\mathbf{F}_2 = \{-400\sin 45°\mathbf{i} + 400\cos 45°\mathbf{j}\}\text{ N}$$

Then,

$$\mathbf{F}_R = \mathbf{F}_1 + \mathbf{F}_2 = (600\cos 30°\text{ N} - 400\sin 45°\text{ N})\mathbf{i} + (600\sin 30°\text{ N} + 400\cos 45°\text{ N})\mathbf{j} = \{236.8\mathbf{i} + 582.8\mathbf{j}\}\text{ N}$$

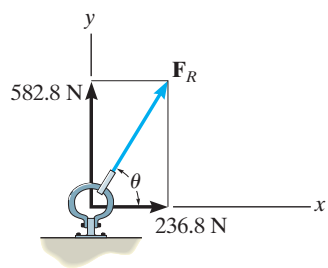

(c)

Fig. 2–19

The magnitude and direction of $\mathbf{F}_R$ are determined in the same manner as before.

NOTE: Comparing the two methods of solution, notice that the use of scalar notation is more efficient since the components can be found *directly*, without first having to express each force as a Cartesian vector before adding the components. Later, however, we will show that Cartesian vector analysis is very beneficial for solving three-dimensional problems.

The end of the boom O in Fig. 2–20a is subjected to three concurrent and coplanar forces. Determine the magnitude and direction of the resultant force.

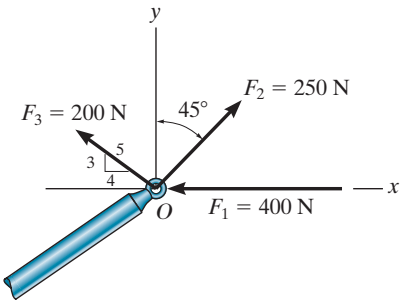

(a)

SOLUTION

Each force is resolved into its x and y components, Fig. 2–20b. Summing the x components, we have

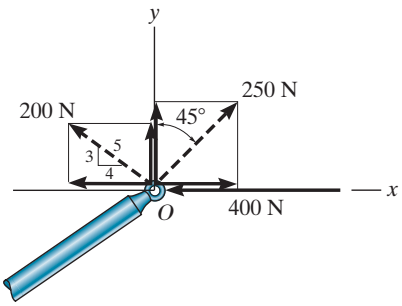

(b)

$$\overset{+}{\rightarrow}(F_R)_x = \Sigma F_x; \qquad (F_R)_x = -400\text{ N} + 250\sin 45°\text{ N} - 200\left(\tfrac{4}{5}\right)\text{ N}$$
$$= -383.2\text{ N} = 383.2\text{ N}\leftarrow$$

The negative sign indicates that F_{Rx} acts to the left, i.e., in the negative x direction, as noted by the small arrow. Obviously, this occurs because F_1 and F_3 in Fig. 2–20b contribute a greater pull to the left than F_2 which pulls to the right. Summing the y components yields

$$+\uparrow(F_R)_y = \Sigma F_y; \qquad (F_R)_y = 250\cos 45°\text{ N} + 200\left(\tfrac{3}{5}\right)\text{ N}$$
$$= 296.8\text{ N}\uparrow$$

The resultant force, shown in Fig. 2–20c, has a *magnitude* of

$$F_R = \sqrt{(-383.2\text{ N})^2 + (296.8\text{ N})^2}$$
$$= 485\text{ N} \qquad \textit{Ans.}$$

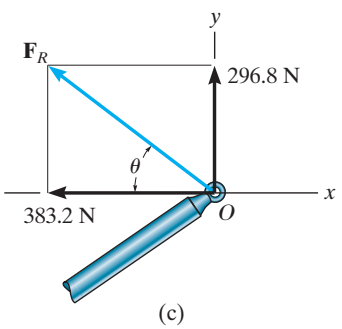

(c)

Fig. 2–20

From the vector addition in Fig. 2–20c, the direction angle θ is

$$\theta = \tan^{-1}\left(\frac{296.8}{383.2}\right) = 37.8° \qquad \textit{Ans.}$$

NOTE: Application of this method is more convenient, compared to using two applications of the parallelogram law, first to add $\mathbf{F}_1$ and $\mathbf{F}_2$ then adding $\mathbf{F}_3$ to this resultant.

FUNDAMENTAL PROBLEMS

F2–7. Resolve each force acting on the post into its x and y components.

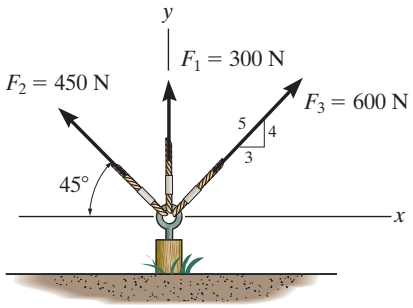

Prob. F2–7

F2–8. Determine the magnitude and direction of the resultant force.

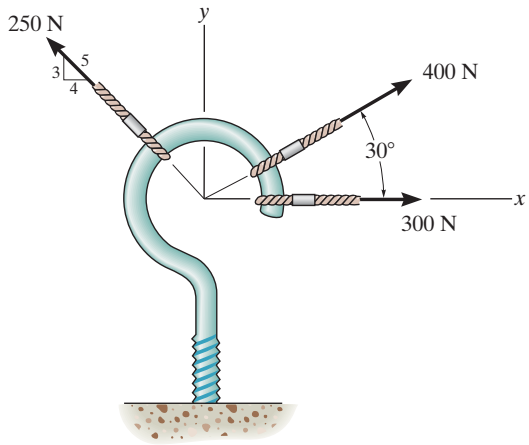

Prob. F2–8

F2–9. Determine the magnitude of the resultant force acting on the corbel and its direction θ measured counterclockwise from the x axis.

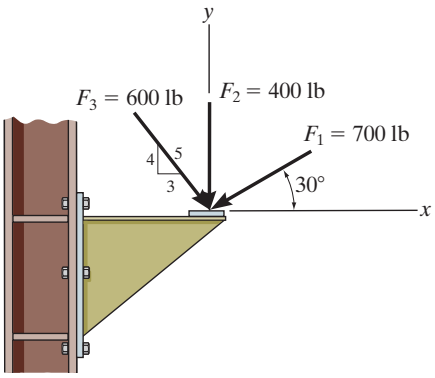

Prob. F2–9

F2–10. If the resultant force acting on the bracket is to be 750 N directed along the positive x axis, determine the magnitude of **F** and its direction θ.

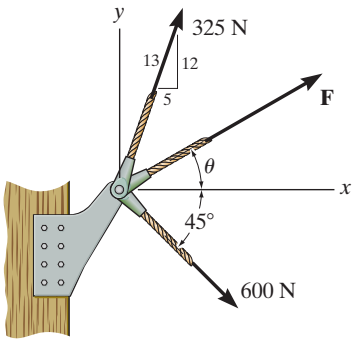

Prob. F2–10

F2–11. If the magnitude of the resultant force acting on the bracket is to be 80 lb directed along the u axis, determine the magnitude of **F** and its direction θ.

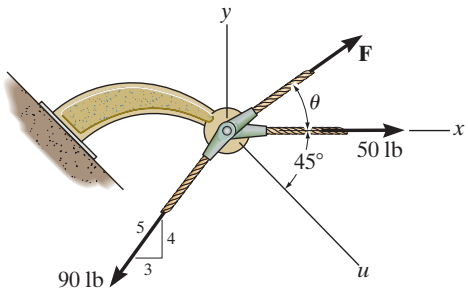

Prob. F2–11

F2–12. Determine the magnitude of the resultant force and its direction θ measured counterclockwise from the positive x axis.

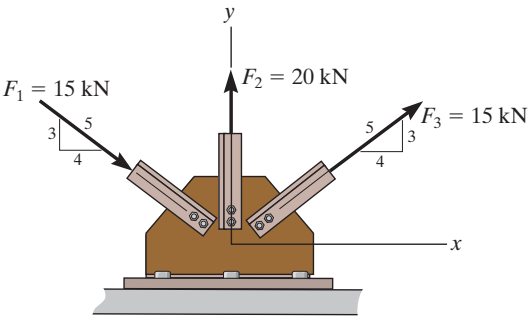

Prob. F2–12

PROBLEMS

***2–32.** Determine the magnitude of the resultant force and its direction, measured counterclockwise from the positive x axis.

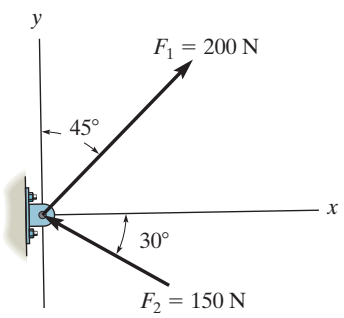

Prob. 2–32

2–33. Determine the magnitude of the resultant force and its direction, measured clockwise from the positive x axis.

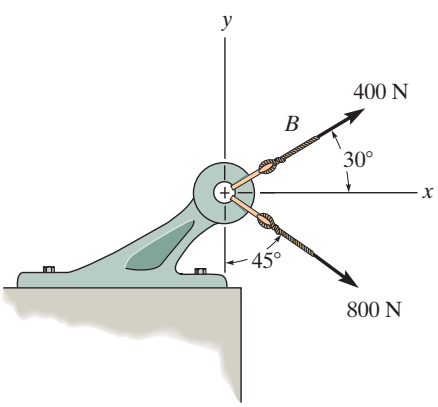

Prob. 2–33

2–34. Resolve $\mathbf{F}_1$ and $\mathbf{F}_2$ into their x and y components.

2–35. Determine the magnitude of the resultant force and its direction measured counterclockwise from the positive x axis.

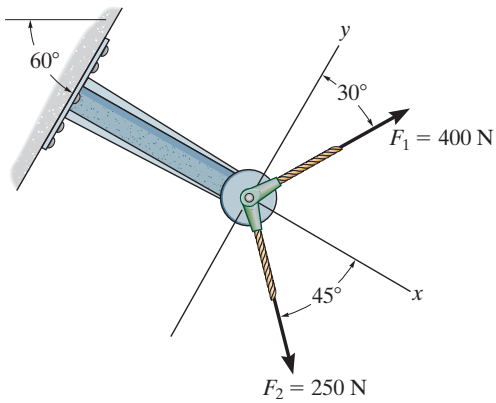

Probs. 2–34/35

***2–36.** Resolve each force acting on the *gusset plate* into its x and y components, and express each force as a Cartesian vector.

2–37. Determine the magnitude of the resultant force acting on the plate and its direction, measured counterclockwise from the positive x axis.

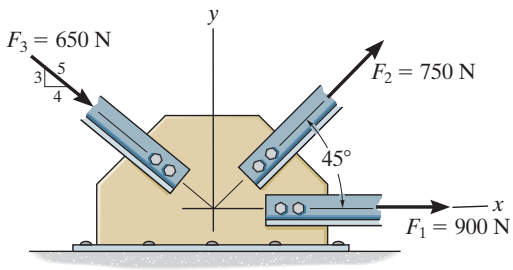

Probs. 2–36/37

2–38. Express each of the three forces acting on the support in Cartesian vector form and determine the magnitude of the resultant force and its direction, measured clockwise from positive x axis.

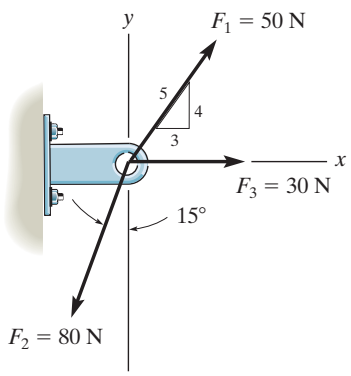

Prob. 2–38

2–39. Determine the x and y components of $\mathbf{F}_1$ and $\mathbf{F}_2$.

***2–40.** Determine the magnitude of the resultant force and its direction, measured counterclockwise from the positive x axis.

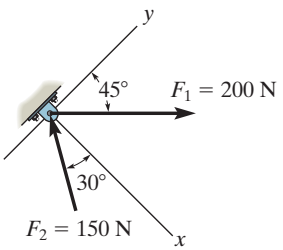

Probs. 2–39/40

2–41. Determine the magnitude of the resultant force and its direction, measured counterclockwise from the positive x axis.

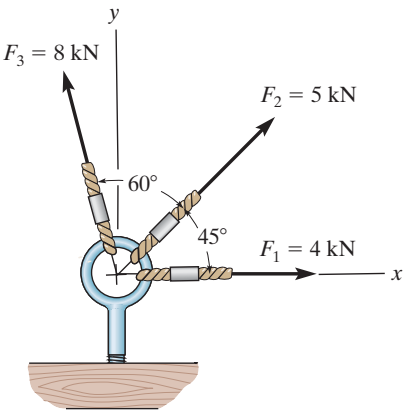

Prob. 2–41

2–42. Express $\mathbf{F}_1$, $\mathbf{F}_2$, and $\mathbf{F}_3$ as Cartesian vectors.

2–43. Determine the magnitude of the resultant force and its direction, measured counterclockwise from the positive x axis.

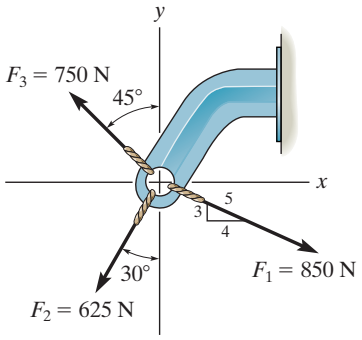

Probs. 2–42/43

***2–44.** Determine the magnitude of the resultant force and its direction, measured clockwise from the positive x axis.

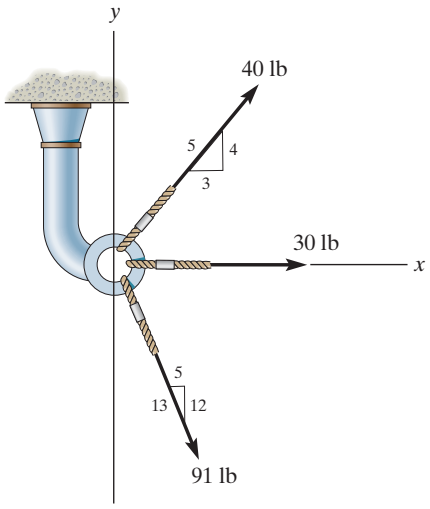

Prob. 2–44

2–45. Determine the magnitude and direction θ of the resultant force $\mathbf{F}_R$. Express the result in terms of the magnitudes of the components $\mathbf{F}_1$ and $\mathbf{F}_2$ and the angle ϕ.

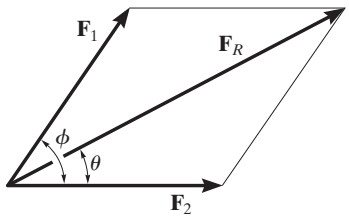

Prob. 2–45

2–46. Determine the magnitude and orientation θ of $\mathbf{F}_B$ so that the resultant force is directed along the positive y axis and has a magnitude of 1500 N.

2–47. Determine the magnitude and orientation, measured counterclockwise from the positive y axis, of the resultant force acting on the bracket, if $F_B = 600$ N and $\theta = 20°$.

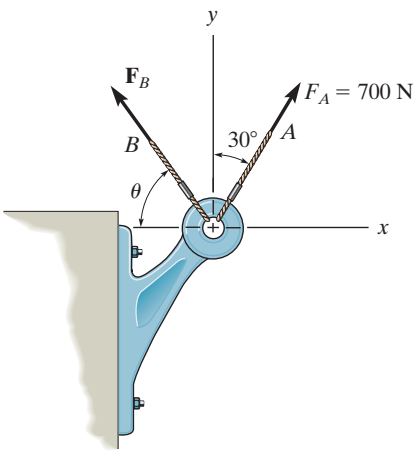

Probs. 2–46/47

***2–48.** Three forces act on the bracket. Determine the magnitude and direction θ of $\mathbf{F}_1$ so that the resultant force is directed along the positive x' axis and has a magnitude of 800 N.

2–49. If $F_1 = 300$ N and $\theta = 10°$, determine the magnitude and direction, measured counterclockwise from the positive x' axis, of the resultant force acting on the bracket.

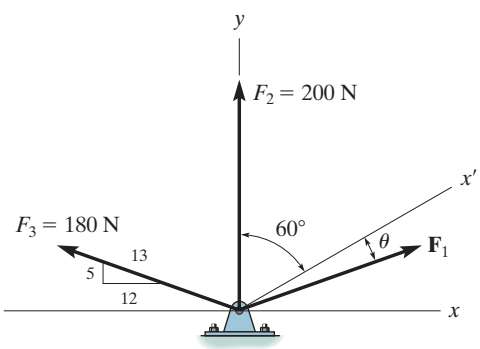

Probs. 2–48/49

2–50. Express $\mathbf{F}_1$, $\mathbf{F}_2$, and $\mathbf{F}_3$ as Cartesian vectors.

2–51. Determine the magnitude of the resultant force and its direction, measured counterclockwise from the positive x axis.

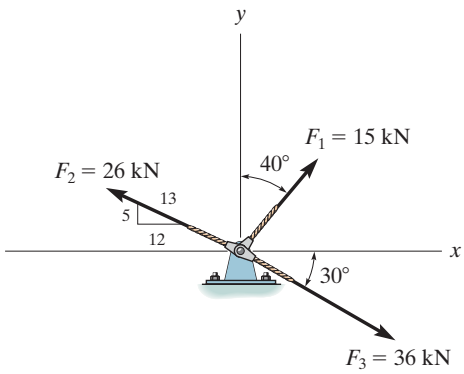

Probs. 2–50/51

***2–52.** Determine the x and y components of each force acting on the *gusset plate* of a bridge truss. Show that the resultant force is zero.

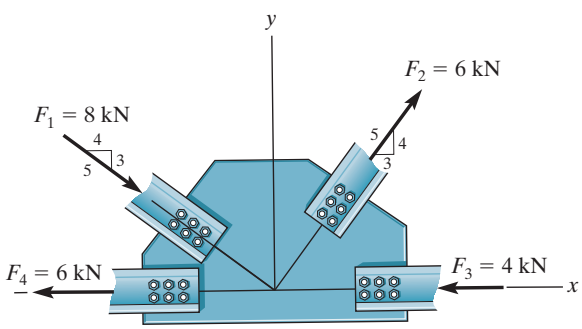

Prob. 2–52

2–53. Express $\mathbf{F}_1$ and $\mathbf{F}_2$ as Cartesian vectors.

2–54. Determine the magnitude of the resultant force and its direction measured counterclockwise from the positive x axis.

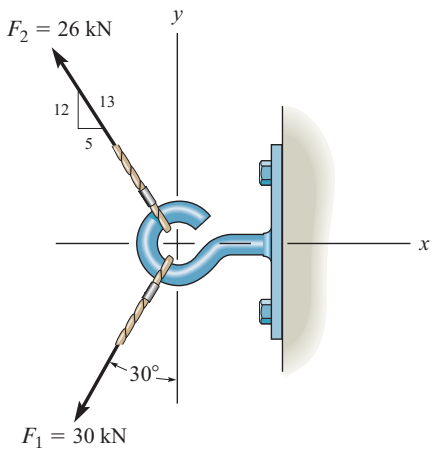

Probs. 2–53/54

2–55. Determine the magnitude of force $\mathbf{F}$ so that the resultant force of the three forces is as small as possible. What is the magnitude of the resultant force?

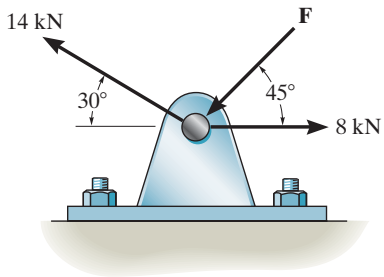

Prob. 2–55

***2–56.** If the magnitude of the resultant force acting on the bracket is to be 450 N directed along the positive u axis, determine the magnitude of $\mathbf{F}_1$ and its direction ϕ.

2–57. If the resultant force acting on the bracket is required to be a minimum, determine the magnitudes of $\mathbf{F}_1$ and the resultant force. Set $\phi = 30°$.

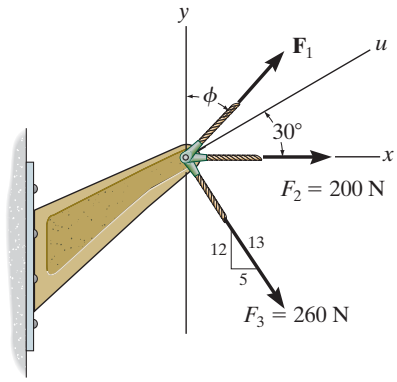

Probs. 2–56/57

2–58. Three forces act on the bracket. Determine the magnitude and direction θ of $\mathbf{F}$ so that the resultant force is directed along the positive x' axis and has a magnitude of 8 kN.

2–59. If $F = 5$ kN and $\theta = 30°$, determine the magnitude of the resultant force and its direction, measured counterclockwise from the positive x axis.

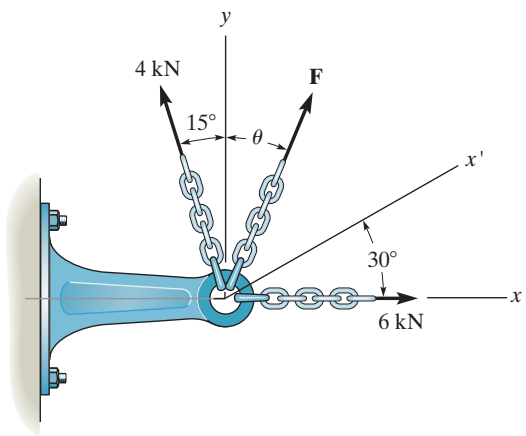

Probs. 2–58/59

Equilibrium of a Particle

CHAPTER OBJECTIVES

- To introduce the concept of the free-body diagram for a particle.
- To show how to solve particle equilibrium problems using the equations of equilibrium.

3.1 Condition for the Equilibrium of a Particle

A particle is said to be in ***equilibrium*** if it remains at rest if originally at rest, or has a constant velocity if originally in motion. Most often, however, the term "equilibrium" or, more specifically, "static equilibrium" is used to describe an object at rest. To maintain equilibrium, it is *necessary* to satisfy Newton's first law of motion, which requires the *resultant force* acting on a particle to be equal to *zero*. This condition is stated by the *equation of equilibrium*,

$$\Sigma \mathbf{F} = \mathbf{0} \tag{3–1}$$

where $\Sigma \mathbf{F}$ is the vector *sum of all the forces* acting on the particle.

Not only is Eq. 3–1 a necessary condition for equilibrium, it is also a *sufficient* condition. This follows from Newton's second law of motion, which can be written as $\Sigma \mathbf{F} = m\mathbf{a}$. Since the force system satisfies Eq. 3–1, then $m\mathbf{a} = \mathbf{0}$, and therefore the particle's acceleration $\mathbf{a} = \mathbf{0}$. Consequently, the particle indeed moves with constant velocity or remains at rest.

3.2 The Free-Body Diagram

To apply the equation of equilibrium, we must account for *all* the known and unknown forces ($\Sigma \mathbf{F}$) which act *on* the particle. The best way to do this is to think of the particle as isolated and "free" from its surroundings. A drawing that shows the particle with *all* the forces that act on it is called a ***free-body diagram*** *(FBD)*.

Before presenting a formal procedure as to how to draw a free-body diagram, we will first consider three types of supports often encountered in particle equilibrium problems.

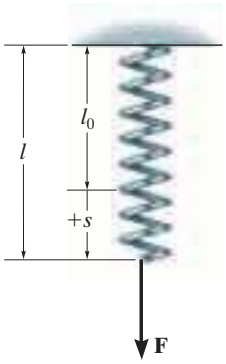

(a)

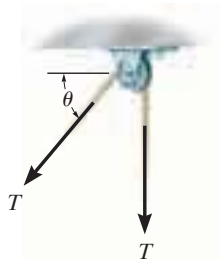

Cable is in tension

(b)

Fig. 3–1

Springs. If a ***linearly elastic spring*** (or cord) of undeformed length l_0 is used to support a particle, the length of the spring will change in direct proportion to the force $\mathbf{F}$ acting on it, Fig. 3–1*a*. A characteristic that defines the "elasticity" of a spring is the ***spring constant*** or ***stiffness*** k.

The magnitude of force exerted on a linearly elastic spring which has a stiffness k and is deformed (elongated or compressed) a distance $s = l - l_0$, measured from its *unloaded* position, is

$$\boxed{F = ks} \tag{3–2}$$

If s is positive, causing an elongation, then $\mathbf{F}$ must pull on the spring; whereas if s is negative, causing a shortening, then $\mathbf{F}$ must push on it. For example, if the spring in Fig. 3–1*a* has an unstretched length of 0.8 m and a stiffness $k = 500\ \text{N/m}$ and it is stretched to a length of 1 m, so that $s = l - l_0 = 1\ \text{m} - 0.8\ \text{m} = 0.2\ \text{m}$, then a force $F = ks = 500\ \text{N/m}(0.2\ \text{m}) = 100\ \text{N}$ is needed.

Cables and Pulleys. Unless otherwise stated throughout this book, except in Sec. 7.4, all cables (or cords) will be assumed to have negligible weight and they cannot stretch. Also, a cable can support *only* a tension or "pulling" force, and this force always acts in the direction of the cable. In Chapter 5, it will be shown that the tension force developed in a continuous cable which passes over a frictionless pulley must have a *constant* magnitude to keep the cable in equilibrium. Hence, for any angle θ, shown in Fig. 3–1*b*, the cable is subjected to a constant tension T throughout its length.

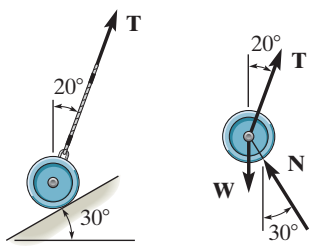

(a) (b)

Fig. 3–2

Smooth Contact. If an object rests on a *smooth surface*, then the surface will exert a force on the object that is normal to the surface at the point of contact. An example of this is shown in Fig. 3–2*a*. In addition to this normal force $\mathbf{N}$, the cylinder is also subjected to its weight $\mathbf{W}$ and the force $\mathbf{T}$ of the cord. Since these three forces are concurrent at the center of the cylinder, Fig. 3–2*b*, we can apply the equation of equilibrium to this "particle," which is the same as applying it to the cylinder.

Procedure for Drawing a Free-Body Diagram

Since we must account for *all the forces acting on the particle* when applying the equations of equilibrium, the importance of first drawing a free-body diagram cannot be overemphasized. To construct a free-body diagram, the following three steps are necessary.

Draw Outlined Shape.

Imagine the particle to be *isolated* or cut "free" from its surroundings. This requires *removing* all the supports and drawing the particle's outlined shape.

Show All Forces.

Indicate on this sketch *all* the forces that act *on the particle*. These forces can be *active forces*, which tend to set the particle in motion, or they can be *reactive forces* which are the result of the constraints or supports that tend to prevent motion. To account for all these forces, it may be helpful to trace around the particle's boundary, carefully noting each force acting on it.

Identify Each Force.

The forces that are *known* should be labeled with their proper magnitudes and directions. Letters are used to represent the magnitudes and directions of forces that are unknown.

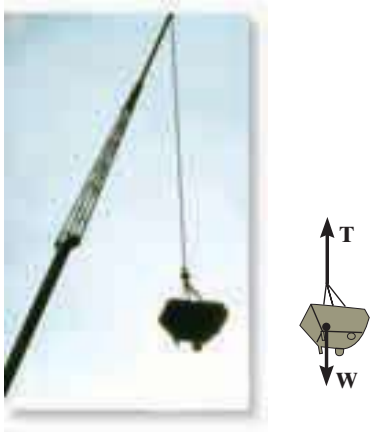

The bucket is held in equilibrium by the cable, and instinctively we know that the force in the cable must equal the weight of the bucket. By drawing a free-body diagram of the bucket we can understand why this is so. This diagram shows that there are only two forces *acting on the bucket*, namely, its weight **W** and the force **T** of the cable. For equilibrium, the resultant of these forces must be equal to zero, and so $T = W$. (© Russell C. Hibbeler)

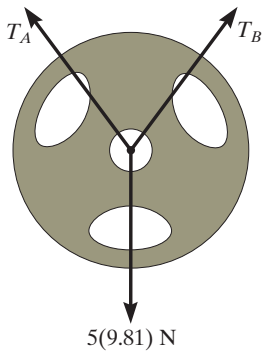

The 5-kg plate is suspended by two straps A and B. To find the force in each strap we should consider the free-body diagram of the plate. As noted, the three forces acting on it are concurrent at the center. (© Russell C. Hibbeler)

The sphere in Fig. 3–3*a* has a mass of 6 kg and is supported as shown. Draw a free-body diagram of the sphere, the cord *CE*, and the knot at *C*.

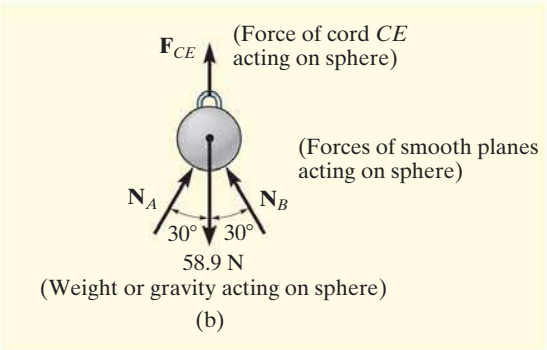

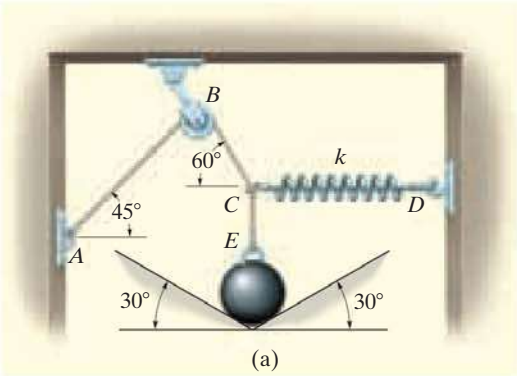

SOLUTION

Sphere. Once the supports are *removed*, we can see that there are four forces acting on the sphere, namely, its weight, 6 kg (9.81 m/s^2) = 58.9 N, the force of cord *CE*, and the two normal forces caused by the smooth inclined planes. The free-body diagram is shown in Fig. 3–3*b*.

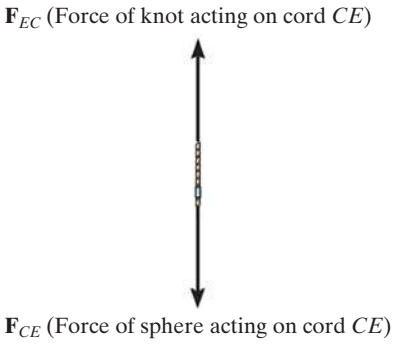

Cord *CE*. When the cord *CE* is isolated from its surroundings, its free-body diagram shows only two forces acting on it, namely, the force of the sphere and the force of the knot, Fig. 3–3*c*. Notice that $\mathbf{F}_{CE}$ shown here is equal but opposite to that shown in Fig. 3–3*b*, a consequence of Newton's third law of action–reaction. Also, $\mathbf{F}_{CE}$ and $\mathbf{F}_{EC}$ pull on the cord and keep it in tension so that it doesn't collapse. For equilibrium, $F_{CE} = F_{EC}$.

Knot. The knot at *C* is subjected to three forces, Fig. 3–3*d*. They are caused by the cords *CBA* and *CE* and the spring *CD*. As required, the free-body diagram shows all these forces labeled with their magnitudes and directions. It is important to recognize that the weight of the sphere does not directly act on the knot. Instead, the cord *CE* subjects the knot to this force.

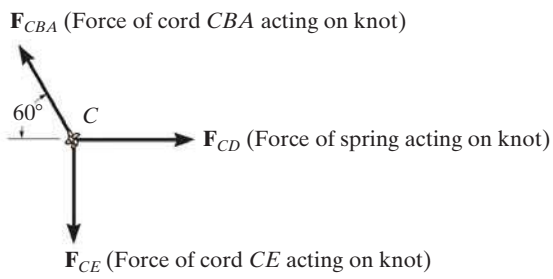

Fig. 3–3

3.3 Coplanar Force Systems

If a particle is subjected to a system of coplanar forces that lie in the x–y plane, as in Fig. 3–4, then each force can be resolved into its **i** and **j** components. For equilibrium, these forces must sum to produce a zero force resultant, i.e.,

$$\Sigma \mathbf{F} = \mathbf{0}$$
$$\Sigma F_x \mathbf{i} + \Sigma F_y \mathbf{j} = \mathbf{0}$$

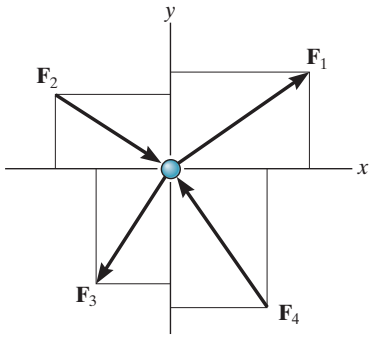

Fig. 3–4

For this vector equation to be satisfied, the resultant force's x and y components must both be equal to zero. Hence,

$$\boxed{\begin{aligned}\Sigma F_x &= 0\\ \Sigma F_y &= 0\end{aligned}} \qquad (3\text{–}3)$$

These two equations can be solved for at most two unknowns, generally represented as angles and magnitudes of forces shown on the particle's free-body diagram.

When applying each of the two equations of equilibrium, we must account for the sense of direction of any component by using an *algebraic sign* which corresponds to the arrowhead direction of the component along the x or y axis. It is important to note that if a force has an *unknown magnitude*, then the arrowhead sense of the force on the free-body diagram can be *assumed*. Then if the *solution* yields a *negative scalar*, this indicates that the sense of the force is opposite to that which was assumed.

For example, consider the free-body diagram of the particle subjected to the two forces shown in Fig. 3–5. Here it is *assumed* that the *unknown force* **F** acts to the right, that is, in the positive x direction, to maintain equilibrium. Applying the equation of equilibrium along the x axis, we have

$$\overset{+}{\rightarrow} \Sigma F_x = 0; \qquad +F + 10\text{ N} = 0$$

Both terms are "positive" since both forces act in the positive x direction. When this equation is solved, $F = -10$ N. Here the *negative sign* indicates that **F** must act to the left to hold the particle in equilibrium, Fig. 3–5. Notice that if the $+x$ axis in Fig. 3–5 were directed to the left, both terms in the above equation would be negative, but again, after solving, $F = -10$ N, indicating that **F** would have to be directed to the left.

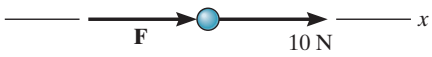

Fig. 3–5

Important Points

The first step in solving any equilibrium problem is to draw the particle's free-body diagram. This requires *removing all the supports* and isolating or freeing the particle from its surroundings and then showing all the forces that act on it.

Equilibrium means the particle is at rest or moving at constant velocity. In two dimensions, the necessary and sufficient conditions for equilibrium require $\Sigma F_x = 0$ and $\Sigma F_y = 0$.

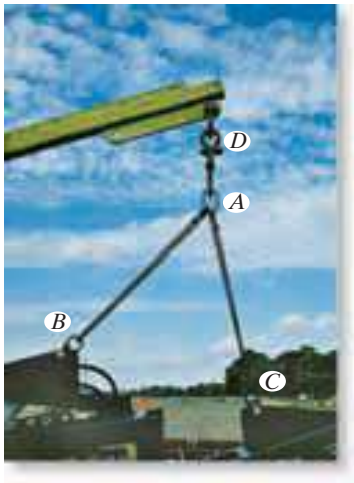

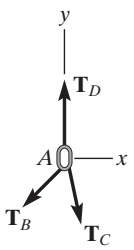

The chains exert three forces on the ring at A, as shown on its free-body diagram. The ring will not move, or will move with constant velocity, provided the summation of these forces along the x and along the y axis equals zero. If one of the three forces is known, the magnitudes of the other two forces can be obtained from the two equations of equilibrium. (© Russell C. Hibbeler)

Procedure for Analysis

Coplanar force equilibrium problems for a particle can be solved using the following procedure.

Free-Body Diagram.

- Establish the x, y axes in any suitable orientation.
- Label all the known and unknown force magnitudes and directions on the diagram.
- The sense of a force having an unknown magnitude can be assumed.

Equations of Equilibrium.

- Apply the equations of equilibrium, $\Sigma F_x = 0$ and $\Sigma F_y = 0$. For convenience, arrows can be written alongside each equation to define the positive directions.
- Components are positive if they are directed along a positive axis, and negative if they are directed along a negative axis.
- If more than two unknowns exist and the problem involves a spring, apply $F = ks$ to relate the spring force to the deformation s of the spring.
- Since the magnitude of a force is always a positive quantity, then if the solution for a force yields a negative result, this indicates that its sense is the reverse of that shown on the free-body diagram.

EXAMPLE 3.2

Determine the tension in cables BA and BC necessary to support the 60-kg cylinder in Fig. 3–6a.

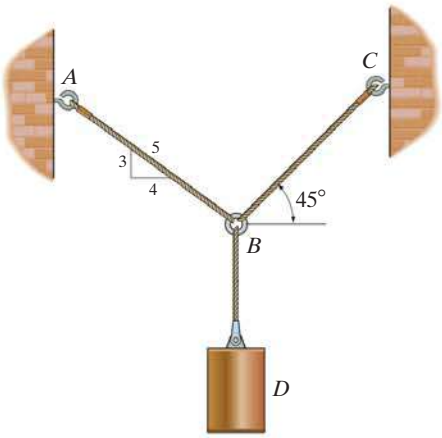

(a)

(b)

SOLUTION

Free-Body Diagram. Due to equilibrium, the weight of the cylinder causes the tension in cable BD to be $T_{BD} = 60(9.81)$ N, Fig. 3–6b. The forces in cables BA and BC can be determined by investigating the equilibrium of ring B. Its free-body diagram is shown in Fig. 3–6c. The magnitudes of $\mathbf{T}_A$ and $\mathbf{T}_C$ are unknown, but their directions are known.

Equations of Equilibrium. Applying the equations of equilibrium along the x and y axes, we have

$$\overset{+}{\rightarrow} \Sigma F_x = 0; \qquad T_C \cos 45° - \left(\tfrac{4}{5}\right) T_A = 0 \qquad (1)$$

$$+\uparrow \Sigma F_y = 0; \qquad T_C \sin 45° + \left(\tfrac{3}{5}\right) T_A - 60(9.81)\text{ N} = 0 \qquad (2)$$

Equation (1) can be written as $T_A = 0.8839 T_C$. Substituting this into Eq. (2) yields

$$T_C \sin 45° + \left(\tfrac{3}{5}\right)(0.8839 T_C) - 60(9.81)\text{ N} = 0$$

so that

$$T_C = 475.66\text{ N} = 476\text{ N} \qquad \textit{Ans.}$$

Substituting this result into either Eq. (1) or Eq. (2), we get

$$T_A = 420\text{ N} \qquad \textit{Ans.}$$

NOTE: The accuracy of these results, of course, depends on the accuracy of the data, i.e., measurements of geometry and loads. For most engineering work involving a problem such as this, the data as measured to three significant figures would be sufficient.

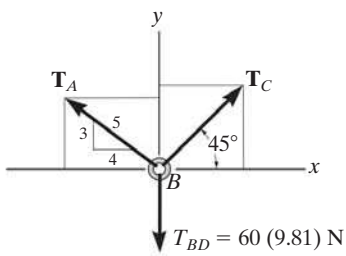

(c)

Fig. 3–6

The 200-kg crate in Fig. 3–7*a* is suspended using the ropes *AB* and *AC*. Each rope can withstand a maximum force of 10 kN before it breaks. If *AB* always remains horizontal, determine the smallest angle θ to which the crate can be suspended before one of the ropes breaks.

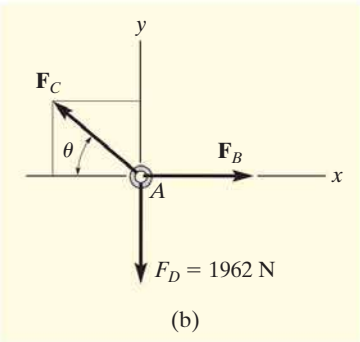

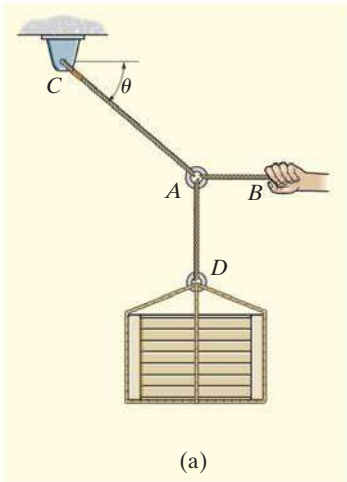

Fig. 3–7

SOLUTION

Free-Body Diagram. We will study the equilibrium of ring *A*. There are three forces acting on it, Fig. 3–7*b*. The magnitude of $\mathbf{F}_D$ is equal to the weight of the crate, i.e., $F_D = 200\,(9.81)\text{ N} = 1962\text{ N} < 10\text{ kN}$.

Equations of Equilibrium. Applying the equations of equilibrium along the *x* and *y* axes,

$$\overset{+}{\rightarrow}\Sigma F_x = 0; \qquad -F_C\cos\theta + F_B = 0; \quad F_C = \frac{F_B}{\cos\theta} \tag{1}$$

$$+\uparrow\Sigma F_y = 0; \qquad F_C\sin\theta - 1962\text{ N} = 0 \tag{2}$$

From Eq. (1), F_C is always greater than F_B since $\cos\theta \leq 1$. Therefore, rope *AC* will reach the maximum tensile force of 10 kN *before* rope *AB*. Substituting $F_C = 10$ kN into Eq. (2), we get

$$[10(10^3)\text{N}]\sin\theta - 1962\text{ N} = 0$$

$$\theta = \sin^{-1}(0.1962) = 11.31° = 11.3° \qquad \textit{Ans.}$$

The force developed in rope *AB* can be obtained by substituting the values for θ and F_C into Eq. (1).

$$10(10^3)\text{ N} = \frac{F_B}{\cos 11.31°}$$

$$F_B = 9.81\text{ kN}$$

EXAMPLE 3.4

Determine the required length of cord AC in Fig. 3–8a so that the 8-kg lamp can be suspended in the position shown. The *undeformed* length of spring AB is $l'_{AB} = 0.4$ m, and the spring has a stiffness of $k_{AB} = 300$ N/m.

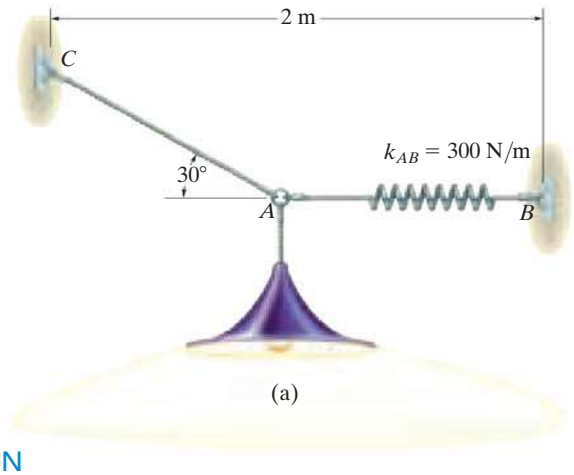

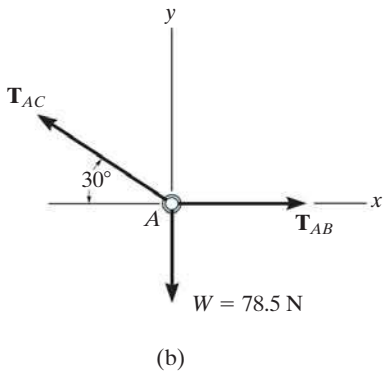

Fig. 3–8

SOLUTION

If the force in spring AB is known, the stretch of the spring can be found using $F = ks$. From the problem geometry, it is then possible to calculate the required length of AC.

Free-Body Diagram. The lamp has a weight $W = 8(9.81) = 78.5$ N and so the free-body diagram of the ring at A is shown in Fig. 3–8b.

Equations of Equilibrium. Using the x, y axes,

$$\xrightarrow{+} \Sigma F_x = 0; \qquad T_{AB} - T_{AC}\cos 30° = 0$$

$$+\uparrow \Sigma F_y = 0; \qquad T_{AC}\sin 30° - 78.5\text{ N} = 0$$

Solving, we obtain

$$T_{AC} = 157.0\text{ N}$$

$$T_{AB} = 135.9\text{ N}$$

The stretch of spring AB is therefore

$$T_{AB} = k_{AB}s_{AB}; \qquad 135.9\text{ N} = 300\text{ N/m}(s_{AB})$$

$$s_{AB} = 0.453\text{ m}$$

so the stretched length is

$$l_{AB} = l'_{AB} + s_{AB}$$

$$l_{AB} = 0.4\text{ m} + 0.453\text{ m} = 0.853\text{ m}$$

The horizontal distance from C to B, Fig. 3–8a, requires

$$2\text{ m} = l_{AC}\cos 30° + 0.853\text{ m}$$

$$l_{AC} = 1.32\text{ m} \qquad \textit{Ans.}$$

PRELIMINARY PROBLEMS

P3–1. In each case, draw a free-body diagram of the ring at A and identify each force.

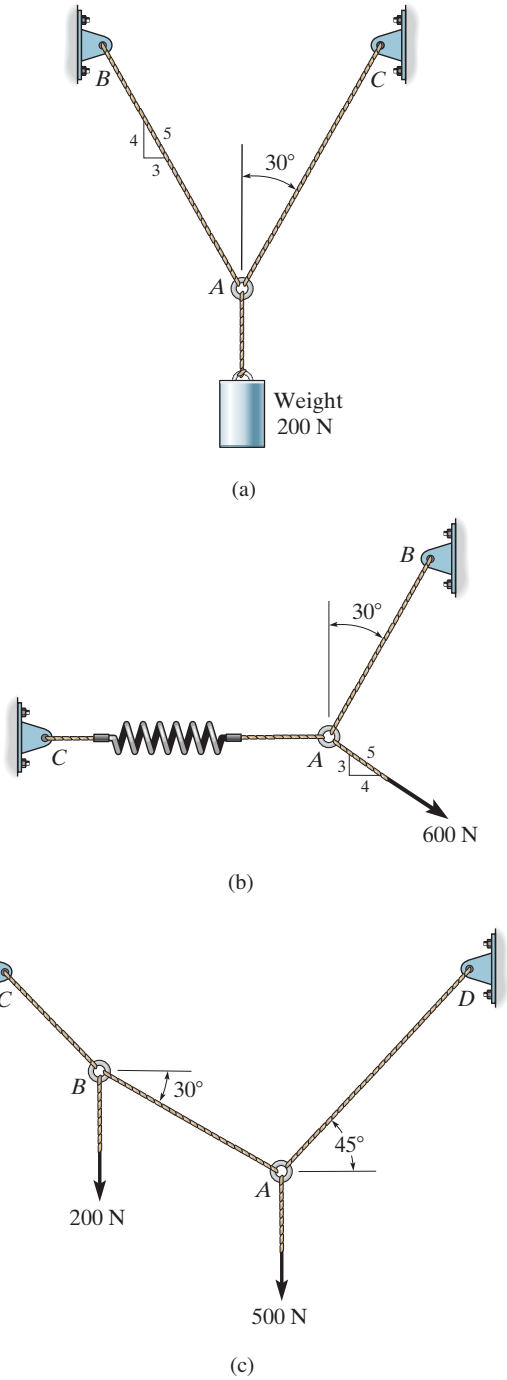

Prob. P3–1

P3–2. Write the two equations of equilibrium, $\Sigma F_x = 0$ and $\Sigma F_y = 0$. Do not solve.

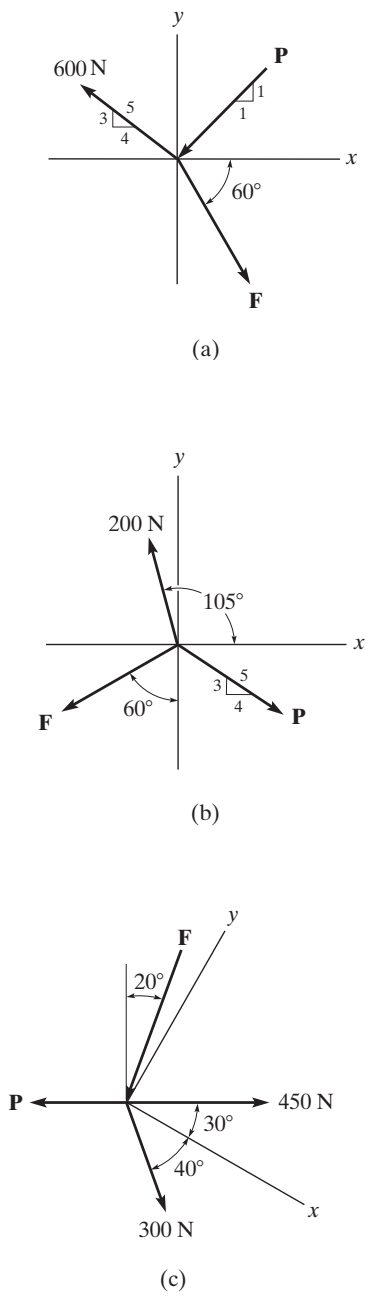

Prob. P3–2

FUNDAMENTAL PROBLEMS

All problem solutions must include an FBD.

F3–1. The crate has a weight of 550 lb. Determine the force in each supporting cable.

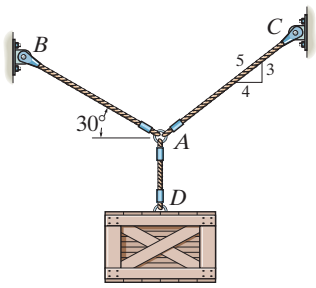

Prob. F3–1

F3–2. The beam has a weight of 700 lb. Determine the shortest cable ABC that can be used to lift it if the maximum force the cable can sustain is 1500 lb.

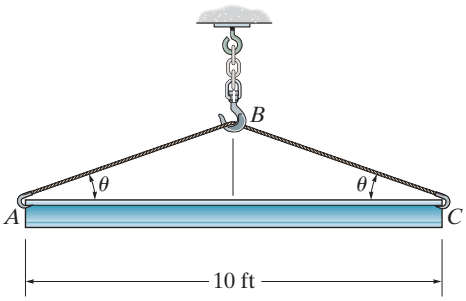

Prob. F3–2

F3–3. If the 5-kg block is suspended from the pulley B and the sag of the cord is $d = 0.15$ m, determine the force in cord ABC. Neglect the size of the pulley.

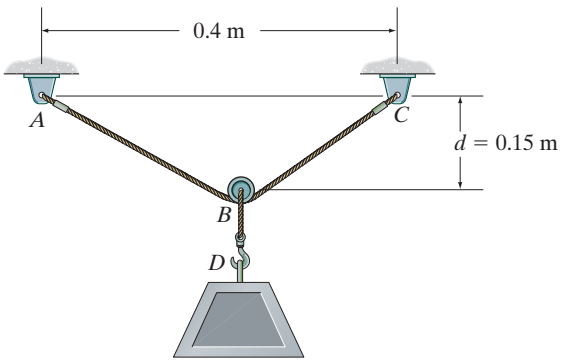

Prob. F3–3

F3–4. The block has a mass of 5 kg and rests on the smooth plane. Determine the unstretched length of the spring.

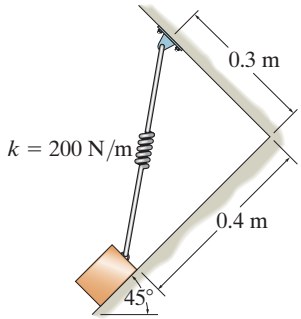

Prob. F3–4

F3–5. If the mass of cylinder C is 40 kg, determine the mass of cylinder A in order to hold the assembly in the position shown.

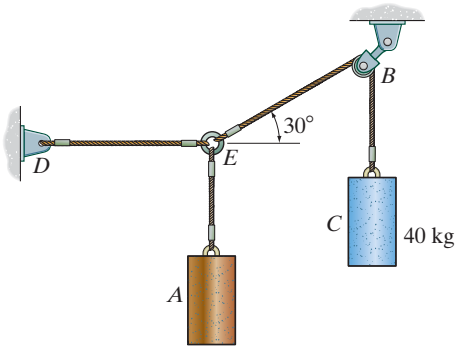

Prob. F3–5

F3–6. Determine the tension in cables AB, BC, and CD, necessary to support the 10-kg and 15-kg traffic lights at B and C, respectively. Also, find the angle θ.

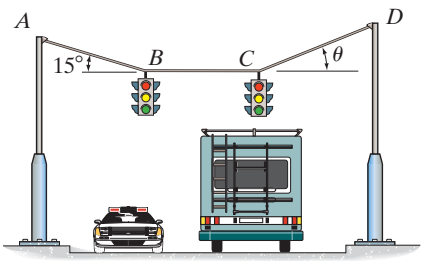

Prob. F3–6

PROBLEMS

All problem solutions must include an FBD.

3–1. The members of a truss are pin connected at joint O. Determine the magnitudes of $\mathbf{F}_1$ and $\mathbf{F}_2$ for equilibrium. Set $\theta = 60°$.

3–2. The members of a truss are pin connected at joint O. Determine the magnitude of $\mathbf{F}_1$ and its angle θ for equilibrium. Set $F_2 = 6$ kN.

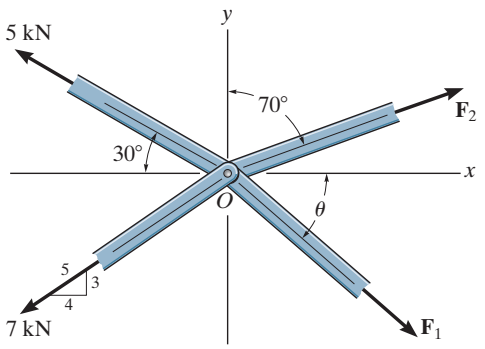

Probs. 3–1/2

3–3. Determine the magnitude and direction θ of $\mathbf{F}$ so that the particle is in equilibrium.

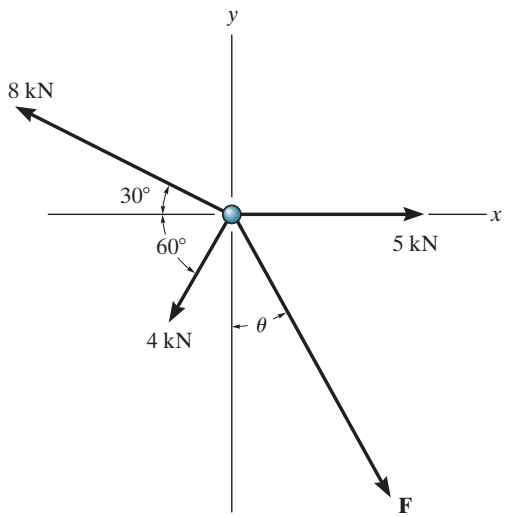

Prob. 3–3

***3–4.** The bearing consists of rollers, symmetrically confined within the housing. The bottom one is subjected to a 125-N force at its contact A due to the load on the shaft. Determine the normal reactions N_B and N_C on the bearing at its contact points B and C for equilibrium.

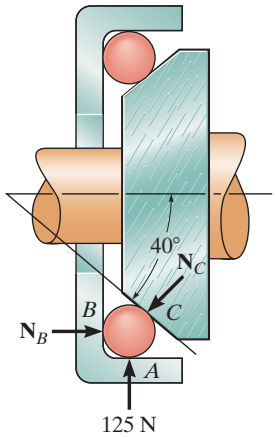

Prob. 3–4

3–5. The members of a truss are connected to the gusset plate. If the forces are concurrent at point O, determine the magnitudes of $\mathbf{F}$ and $\mathbf{T}$ for equilibrium. Take $\theta = 90°$.

3–6. The gusset plate is subjected to the forces of three members. Determine the tension force in member C and its angle θ for equilibrium. The forces are concurrent at point O. Take $F = 8$ kN.

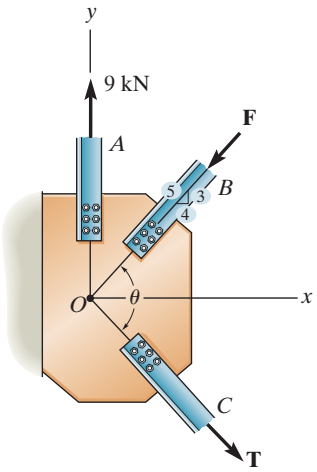

Probs. 3–5/6

3–7. The man attempts to pull down the tree using the cable and *small* pulley arrangement shown. If the tension in AB is 60 lb, determine the tension in cable CAD and the angle θ which the cable makes at the pulley.

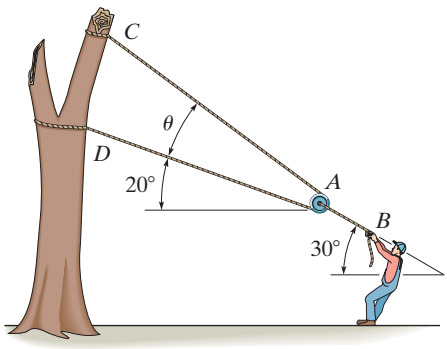

Prob. 3–7

***3–8.** The cords ABC and BD can each support a maximum load of 100 lb. Determine the maximum weight of the crate, and the angle θ for equilibrium.

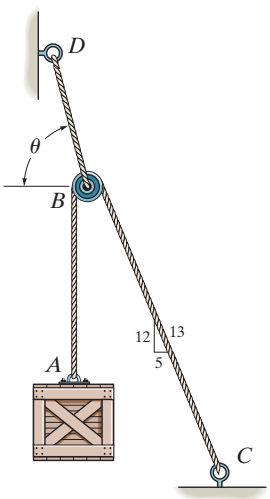

Prob. 3–8

3–9. Determine the maximum force **F** that can be supported in the position shown if each chain can support a maximum tension of 600 lb before it fails.

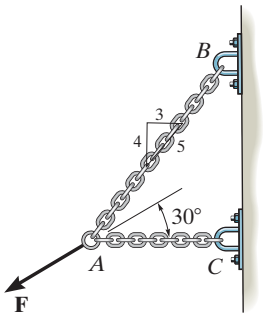

Prob. 3–9

3–10. The block has a weight of 20 lb and is being hoisted at uniform velocity. Determine the angle θ for equilibrium and the force in cord AB.

3–11. Determine the maximum weight W of the block that can be suspended in the position shown if cords AB and CAD can each support a maximum tension of 80 lb. Also, what is the angle θ for equilibrium?

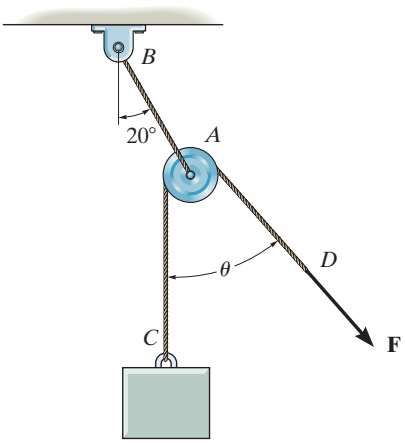

Probs. 3–10/11

3–12. The lift sling is used to hoist a container having a mass of 500 kg. Determine the force in each of the cables AB and AC as a function of θ. If the maximum tension allowed in each cable is 5 kN, determine the shortest length of cables AB and AC that can be used for the lift. The center of gravity of the container is located at G.

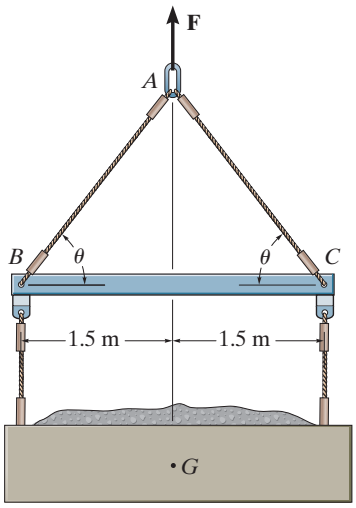

Prob. 3–12

3–13. A nuclear-reactor vessel has a weight of $500(10^3)$ lb. Determine the horizontal compressive force that the spreader bar AB exerts on point A and the force that each cable segment CA and AD exert on this point while the vessel is hoisted upward at constant velocity.

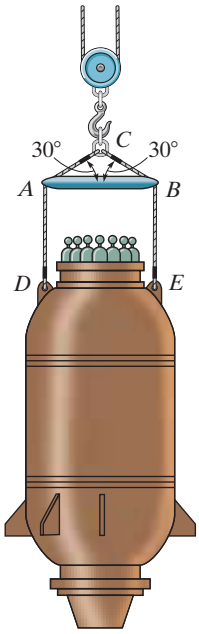

Prob. 3–13

3–14. Determine the stretch in each spring for equilibrium of the 2-kg block. The springs are shown in the equilibrium position.

3–15. The unstretched length of spring AB is 3 m. If the block is held in the equilibrium position shown, determine the mass of the block at D.

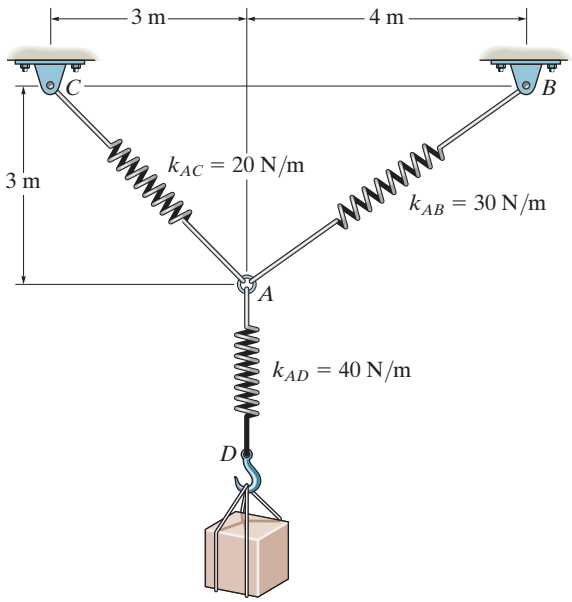

Probs. 3–14/15

***3–16.** Determine the mass of each of the two cylinders if they cause a sag of $s = 0.5$ m when suspended from the rings at A and B. Note that $s = 0$ when the cylinders are removed.

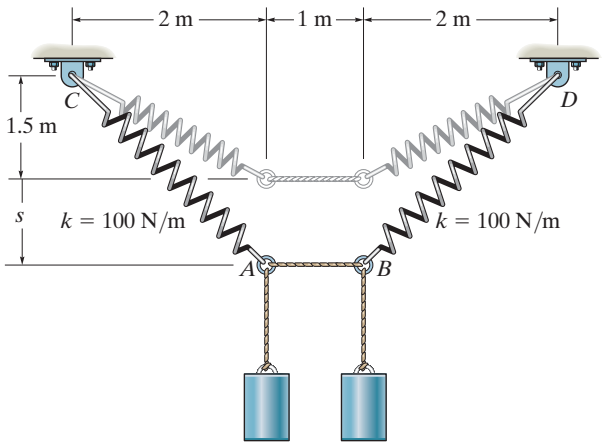

Prob. 3–16

3–17. Determine the stiffness k_T of the single spring such that the force **F** will stretch it by the same amount s as the force **F** stretches the two springs. Express k_T in terms of stiffness k_1 and k_2 of the two springs.

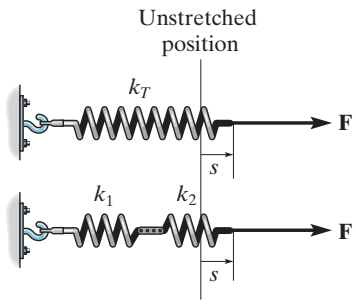

Prob. 3–17

3–18. If the spring DB has an unstretched length of 2 m, determine the stiffness of the spring to hold the 40-kg crate in the position shown.

3–19. Determine the unstretched length of DB to hold the 40-kg crate in the position shown. Take $k = 180$ N/m.

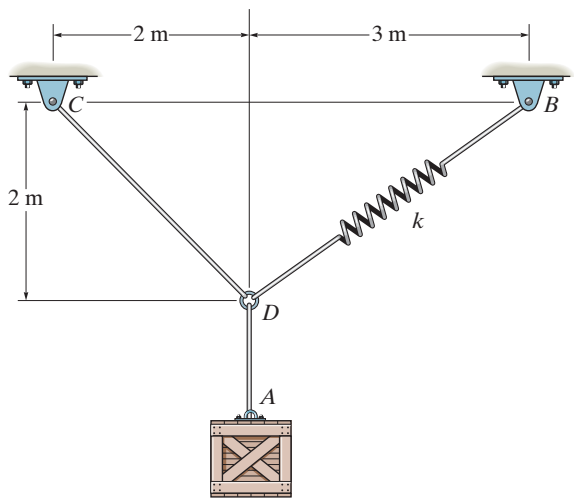

Probs. 3–18/19

***3–20.** A vertical force $P = 10$ lb is applied to the ends of the 2-ft cord AB and spring AC. If the spring has an unstretched length of 2 ft, determine the angle θ for equilibrium. Take $k = 15$ lb/ft.

3–21. Determine the unstretched length of spring AC if a force $P = 80$ lb causes the angle $\theta = 60°$ for equilibrium. Cord AB is 2 ft long. Take $k = 50$ lb/ft.

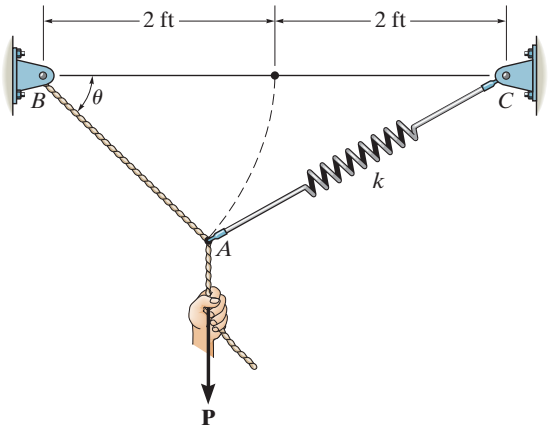

Probs. 3–20/21

3–22. The springs BA and BC each have a stiffness of 500 N/m and an unstretched length of 3 m. Determine the horizontal force **F** applied to the cord which is attached to the small ring B so that the displacement of AB from the wall is $d = 1.5$ m.

3–23. The springs BA and BC each have a stiffness of 500 N/m and an unstretched length of 3 m. Determine the displacement d of the cord from the wall when a force $F = 175$ N is applied to the cord.

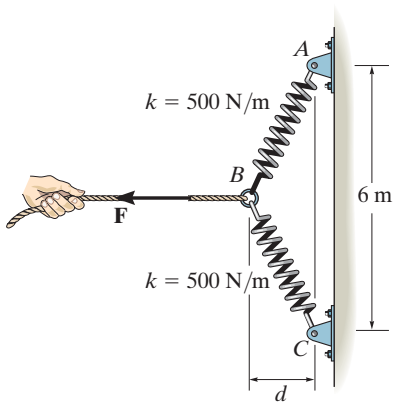

Probs. 3–22/23

***3–24.** Determine the distances x and y for equilibrium if $F_1 = 800$ N and $F_2 = 1000$ N.

3–25. Determine the magnitude of F_1 and the distance y if $x = 1.5$ m and $F_2 = 1000$ N.

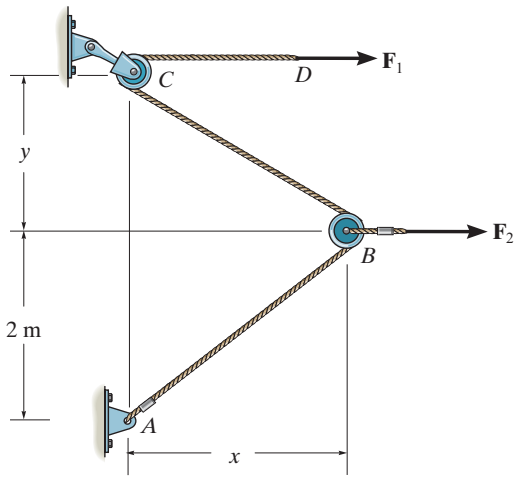

Probs. 3–24/25

3–26. The 30-kg pipe is supported at A by a system of five cords. Determine the force in each cord for equilibrium.

3–27. Each cord can sustain a maximum tension of 500 N. Determine the largest mass of pipe that can be supported.

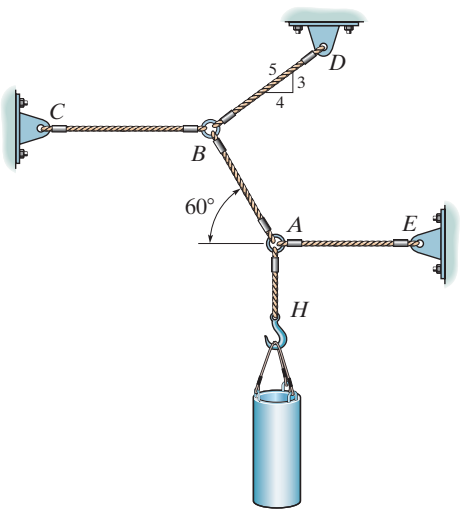

Probs. 3–26/27

***3–28.** The street-lights at A and B are suspended from the two poles as shown. If each light has a weight of 50 lb, determine the tension in each of the three supporting cables and the required height h of the pole DE so that cable AB is horizontal.

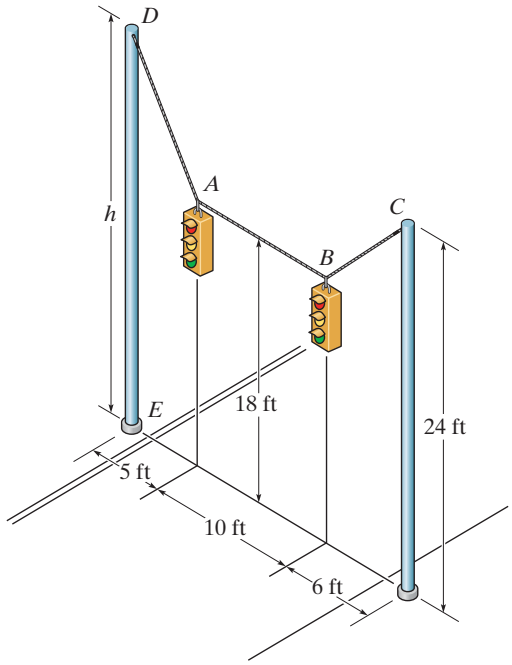

Prob. 3–28

3–29. Determine the tension developed in each cord required for equilibrium of the 20-kg lamp.

3–30. Determine the maximum mass of the lamp that the cord system can support so that no single cord develops a tension exceeding 400 N.

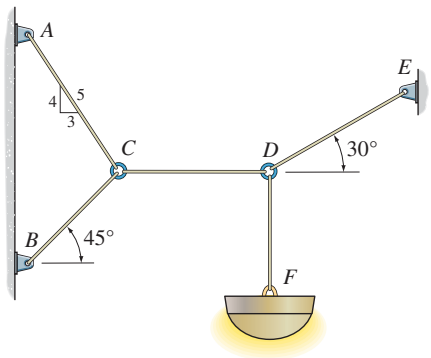

Probs. 3–29/30

3–31. Blocks D and E have a mass of 4 kg and 6 kg, respectively. If $x = 2$ m determine the force **F** and the sag s for equilibrium.

***3–32.** Blocks D and E have a mass of 4 kg and 6 kg, respectively. If $F = 80$ N, determine the sag s and distance x for equilibrium.

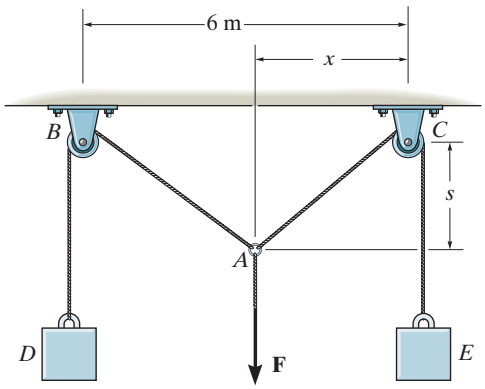

Probs. 3–31/32

3–33. The lamp has a weight of 15 lb and is supported by the six cords connected together as shown. Determine the tension in each cord and the angle θ for equilibrium. Cord BC is horizontal.

3–34. Each cord can sustain a maximum tension of 20 lb. Determine the largest weight of the lamp that can be supported. Also, determine θ of cord DC for equilibrium.

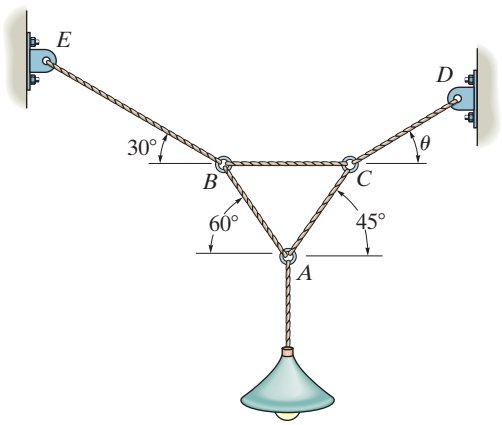

Probs. 3–33/34

3–35. The ring of negligible size is subjected to a vertical force of 200 lb. Determine the required length l of cord AC such that the tension acting in AC is 160 lb. Also, what is the force in cord AB? *Hint:* Use the equilibrium condition to determine the required angle θ for attachment, then determine l using trigonometry applied to triangle ABC.

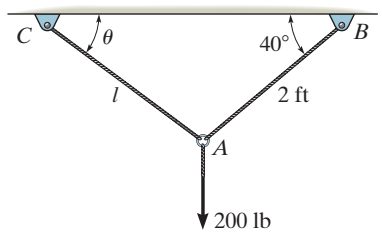

Prob. 3–35

***3–36.** Cable ABC has a length of 5 m. Determine the position x and the tension developed in ABC required for equilibrium of the 100-kg sack. Neglect the size of the pulley at B.

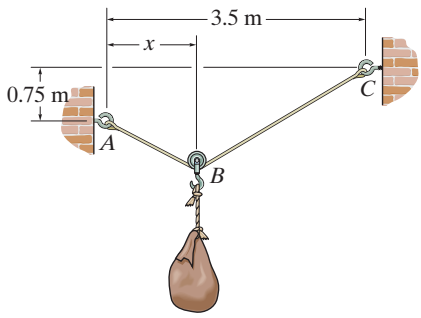

Prob. 3–36

3–37. A 4-kg sphere rests on the smooth parabolic surface. Determine the normal force it exerts on the surface and the mass m_B of block B needed to hold it in the equilibrium position shown.

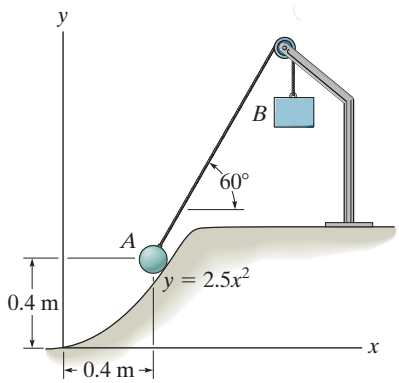

Prob. 3–37

3–38. Determine the forces in cables AC and AB needed to hold the 20-kg ball D in equilibrium. Take $F = 300$ N and $d = 1$ m.

3–39. The ball D has a mass of 20 kg. If a force of $F = 100$ N is applied horizontally to the ring at A, determine the dimension d so that the force in cable AC is zero.

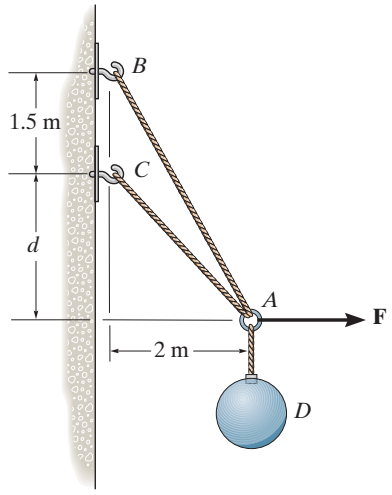

Probs. 3–38/39

***3–40.** The 200-lb uniform container is suspended by means of a 6-ft-long cable, which is attached to the sides of the tank and passes over the small pulley located at O. If the cable can be attached at either points A and B, or C and D, determine which attachment produces the least amount of tension in the cable. What is this tension?

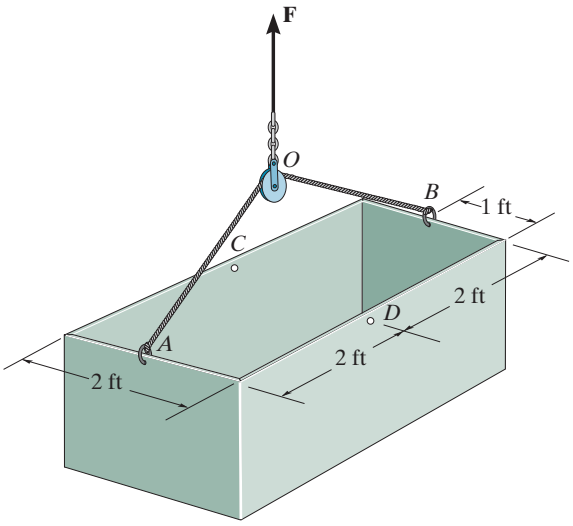

Prob. 3–40

3–41. The single elastic cord ABC is used to support the 40-lb load. Determine the position x and the tension in the cord that is required for equilibrium. The cord passes through the smooth ring at B and has an unstretched length of 6ft and stiffness of $k = 50$ lb/ft.

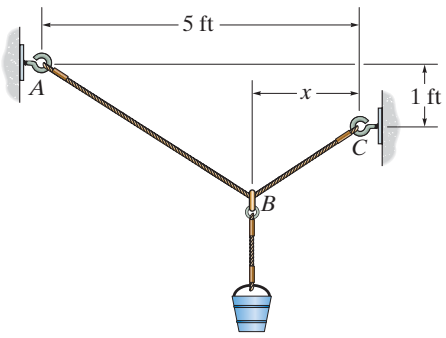

Prob. 3–41

3–42. A "scale" is constructed with a 4-ft-long cord and the 10-lb block D. The cord is fixed to a pin at A and passes over two *small* pulleys. Determine the weight of the suspended block B if the system is in equilibrium when $s = 1.5$ ft.

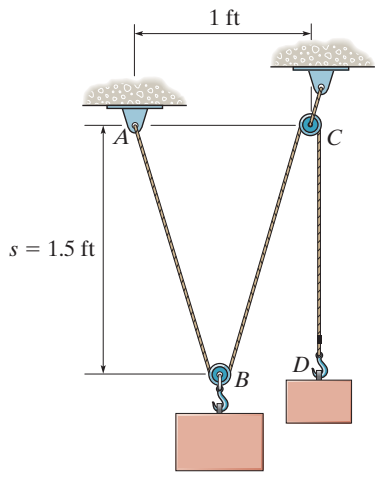

Prob. 3–42

CONCEPTUAL PROBLEMS

C3–1. The concrete wall panel is hoisted into position using the two cables AB and AC of equal length. Establish appropriate dimensions and use an equilibrium analysis to show that the longer the cables the less the force in each cable.

Prob. C3–1 (© Russell C. Hibbeler)

C3–2. The hoisting cables BA and BC each have a length of 20 ft. If the maximum tension that can be supported by each cable is 900 lb, determine the maximum distance AC between them in order to lift the uniform 1200-lb truss with constant velocity.

Prob. C3–2 (© Russell C. Hibbeler)

C3–3. The device DB is used to pull on the chain ABC to hold a door closed on the bin. If the angle between AB and BC is 30°, determine the angle between DB and BC for equilibrium.

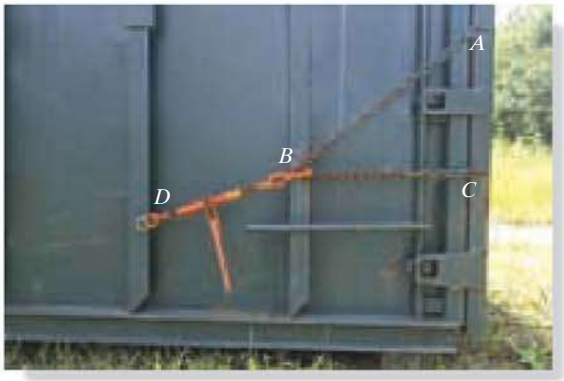

Prob. C3–3 (© Russell C. Hibbeler)

C3–4. Chain AB is 1 m long and chain AC is 1.2 m long. If the distance BC is 1.5 m, and AB can support a maximum force of 2 kN, whereas AC can support a maximum force of 0.8 kN, determine the largest vertical force F that can be applied to the link at A.

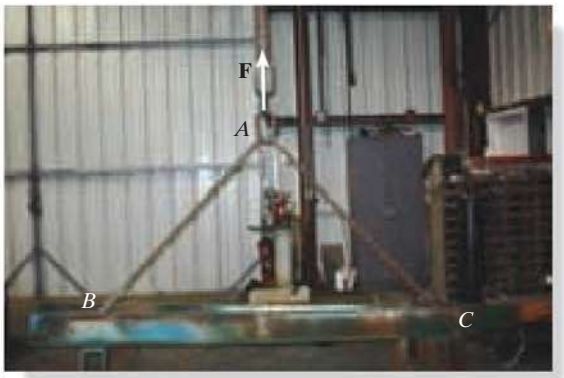

Prob. C3–4 (© Russell C. Hibbeler)

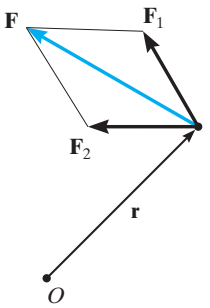

Fig. 4–16

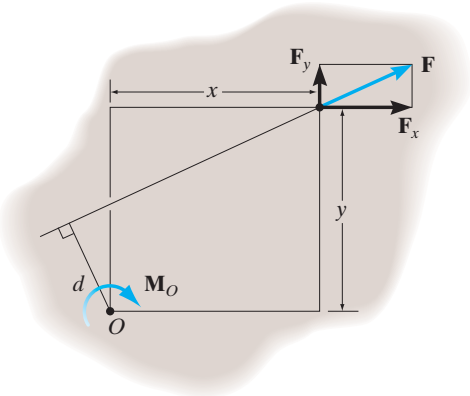

Fig. 4–17

4.4 Principle of Moments

A concept often used in mechanics is the ***principle of moments***, which is sometimes referred to as **Varignon's theorem** since it was orginally developed by the French mathematician Pierre Varignon (1654–1722). It states that *the moment of a force about a point is equal to the sum of the moments of the components of the force about the point*. This theorem can be proven easily using the vector cross product since the cross product obeys the *distributive law*. For example, consider the moments of the force **F** and two of its components about point O, Fig. 4–16. Since $\mathbf{F} = \mathbf{F}_1 + \mathbf{F}_2$ we have

$$\mathbf{M}_O = \mathbf{r} \times \mathbf{F} = \mathbf{r} \times (\mathbf{F}_1 + \mathbf{F}_2) = \mathbf{r} \times \mathbf{F}_1 + \mathbf{r} \times \mathbf{F}_2$$

For two-dimensional problems, Fig. 4–17, we can use the principle of moments by resolving the force into its rectangular components and then determine the moment using a scalar analysis. Thus,

$$M_O = F_x y - F_y x$$

This method is generally easier than finding the same moment using $M_O = Fd$.

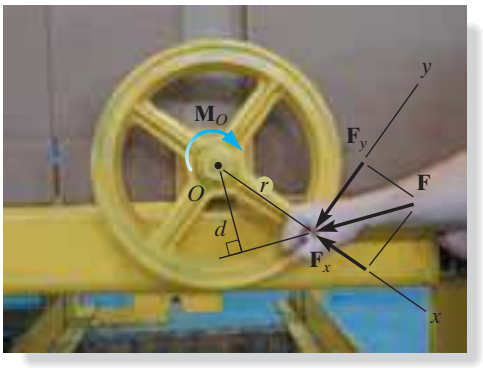

The moment of the force about point O is $M_O = Fd$. But it is easier to find this moment using $M_O = F_x(0) + F_y r = F_y r$. (© Russell C. Hibbeler)

Important Points

- The moment of a force creates the tendency of a body to turn about an axis passing through a specific point O.
- Using the right-hand rule, the sense of rotation is indicated by the curl of the fingers, and the thumb is directed along the moment axis, or line of action of the moment.
- The magnitude of the moment is determined from $M_O = Fd$, where d is called the moment arm, which represents the perpendicular or shortest distance from point O to the line of action of the force.
- In three dimensions the vector cross product is used to determine the moment, i.e., $\mathbf{M}_O = \mathbf{r} \times \mathbf{F}$. Remember that **r** is directed *from* point O *to any point* on the line of action of **F**.

EXAMPLE 4.5

Determine the moment of the force in Fig. 4–18*a* about point *O*.

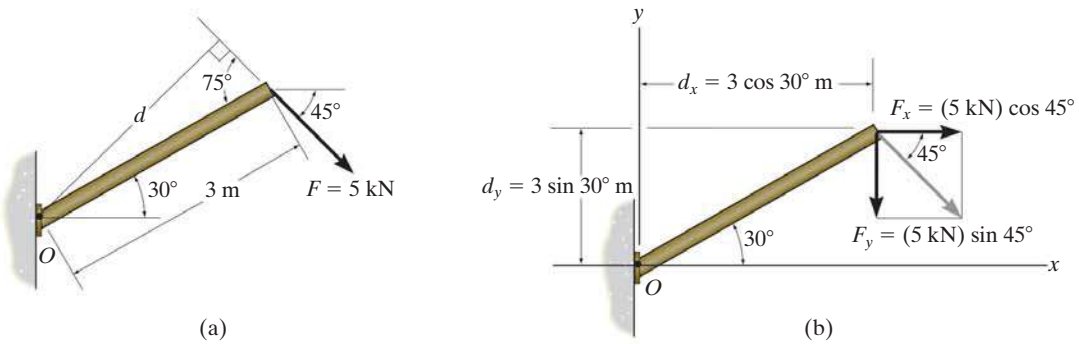

SOLUTION I

The moment arm *d* in Fig. 4–18*a* can be found from trigonometry.

$$d = (3\text{ m})\sin 75° = 2.898\text{ m}$$

Thus,

$$M_O = Fd = (5\text{ kN})(2.898\text{ m}) = 14.5\text{ kN}\cdot\text{m}\circlearrowright \qquad \textit{Ans.}$$

Since the force tends to rotate or orbit clockwise about point *O*, the moment is directed into the page.

SOLUTION II

The *x* and *y* components of the force are indicated in Fig. 4–18*b*. Considering counterclockwise moments as positive, and applying the principle of moments, we have

$$\begin{aligned}\circlearrowleft + M_O &= -F_x d_y - F_y d_x \\ &= -(5\cos 45°\text{ kN})(3\sin 30°\text{ m}) - (5\sin 45°\text{ kN})(3\cos 30°\text{ m}) \\ &= -14.5\text{ kN}\cdot\text{m} = 14.5\text{ kN}\cdot\text{m}\circlearrowright \qquad \textit{Ans.}\end{aligned}$$

SOLUTION III

The *x* and *y* axes can be set parallel and perpendicular to the rod's axis as shown in Fig. 4–18*c*. Here $\mathbf{F}_x$ produces no moment about point *O* since its line of action passes through this point. Therefore,

$$\begin{aligned}\circlearrowleft + M_O &= -F_y d_x \\ &= -(5\sin 75°\text{ kN})(3\text{ m}) \\ &= -14.5\text{ kN}\cdot\text{m} = 14.5\text{ kN}\cdot\text{m}\circlearrowright \qquad \textit{Ans.}\end{aligned}$$

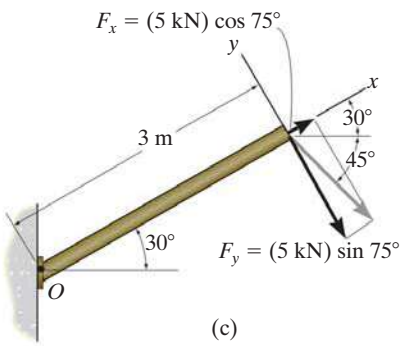

Fig. 4–18

Force **F** acts at the end of the angle bracket in Fig. 4–19*a*. Determine the moment of the force about point *O*.

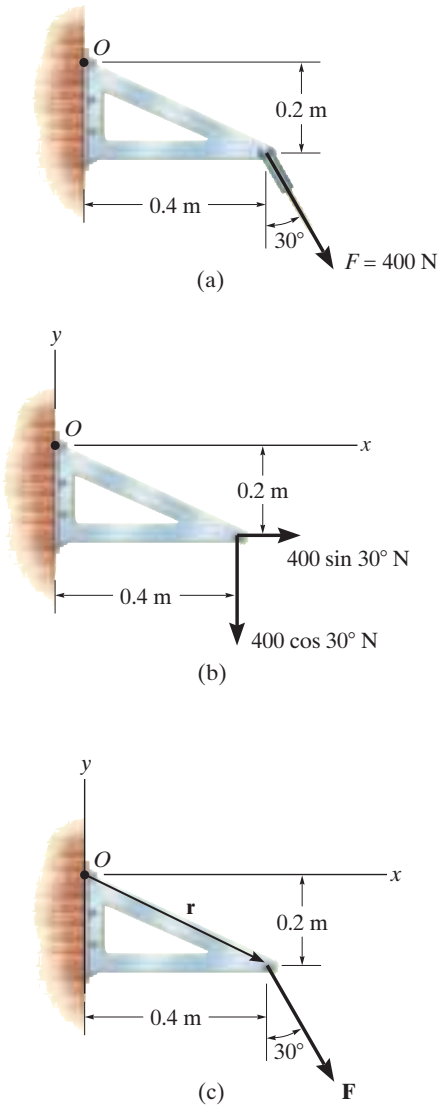

Fig. 4–19

SOLUTION I *(SCALAR ANALYSIS)*

The force is resolved into its *x* and *y* components, Fig. 4–19*b*, then

$$\circlearrowleft + M_O = 400 \sin 30^\circ \text{ N}(0.2 \text{ m}) - 400 \cos 30^\circ \text{ N}(0.4 \text{ m})$$
$$= -98.6 \text{ N}\cdot\text{m} = 98.6 \text{ N}\cdot\text{m} \circlearrowright$$

or

$$\mathbf{M}_O = \{-98.6\mathbf{k}\} \text{ N}\cdot\text{m} \qquad \textit{Ans.}$$

SOLUTION II *(VECTOR ANALYSIS)*

Using a Cartesian vector approach, the force and position vectors, Fig. 4–19*c*, are

$$\mathbf{r} = \{0.4\mathbf{i} - 0.2\mathbf{j}\} \text{ m}$$
$$\mathbf{F} = \{400 \sin 30^\circ \mathbf{i} - 400 \cos 30^\circ \mathbf{j}\} \text{ N}$$
$$= \{200.0\mathbf{i} - 346.4\mathbf{j}\} \text{ N}$$

The moment is therefore

$$\mathbf{M}_O = \mathbf{r} \times \mathbf{F} = \begin{vmatrix} \mathbf{i} & \mathbf{j} & \mathbf{k} \\ 0.4 & -0.2 & 0 \\ 200.0 & -346.4 & 0 \end{vmatrix}$$
$$= 0\mathbf{i} - 0\mathbf{j} + [0.4(-346.4) - (-0.2)(200.0)]\mathbf{k}$$
$$= \{-98.6\mathbf{k}\} \text{ N}\cdot\text{m} \qquad \textit{Ans.}$$

NOTE: It is seen that the scalar analysis (Solution I) provides a more *convenient method* for analysis than Solution II since the direction of the moment and the moment arm for each component force are easy to establish. Hence, this method is generally recommended for solving problems displayed in two dimensions, whereas a Cartesian vector analysis is generally recommended only for solving three-dimensional problems.

PRELIMINARY PROBLEMS

P4–1. In each case, determine the moment of the force about point O.

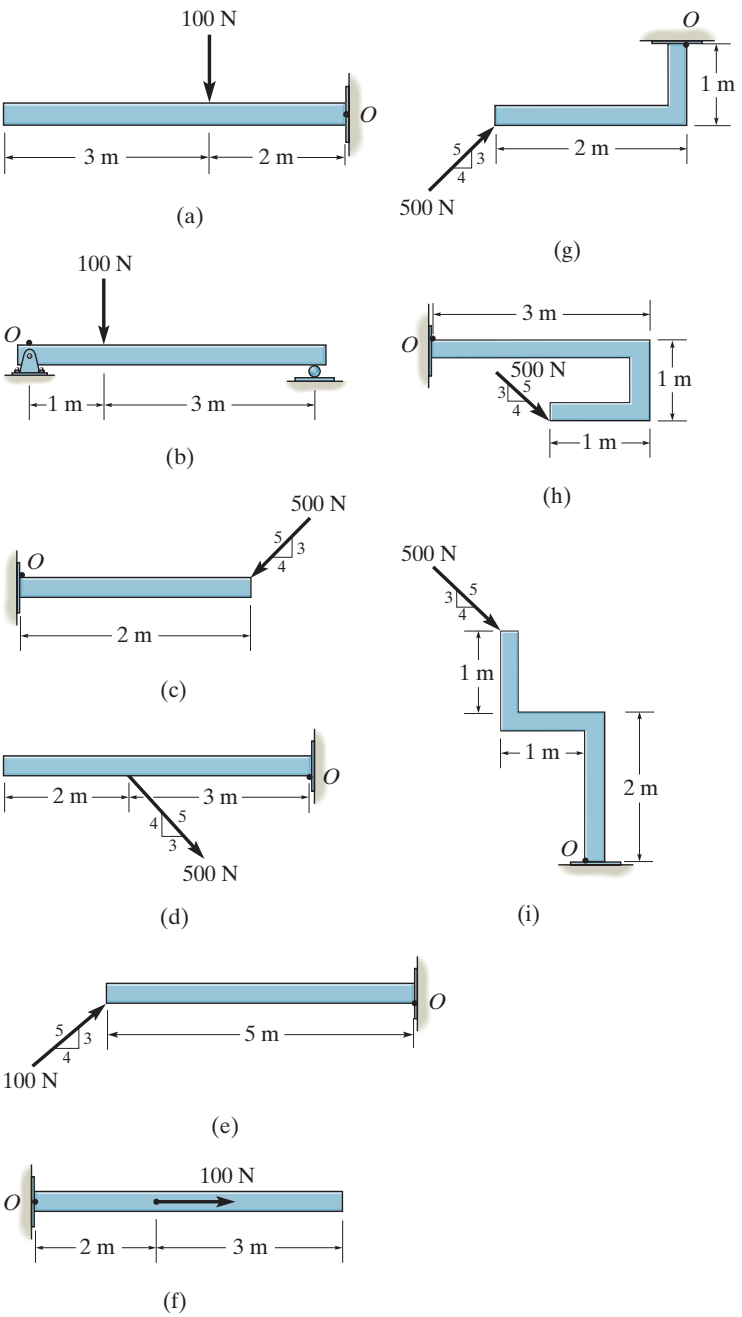

Prob. P4–1

P4–2. In each case, set up the determinant to find the moment of the force about point P.

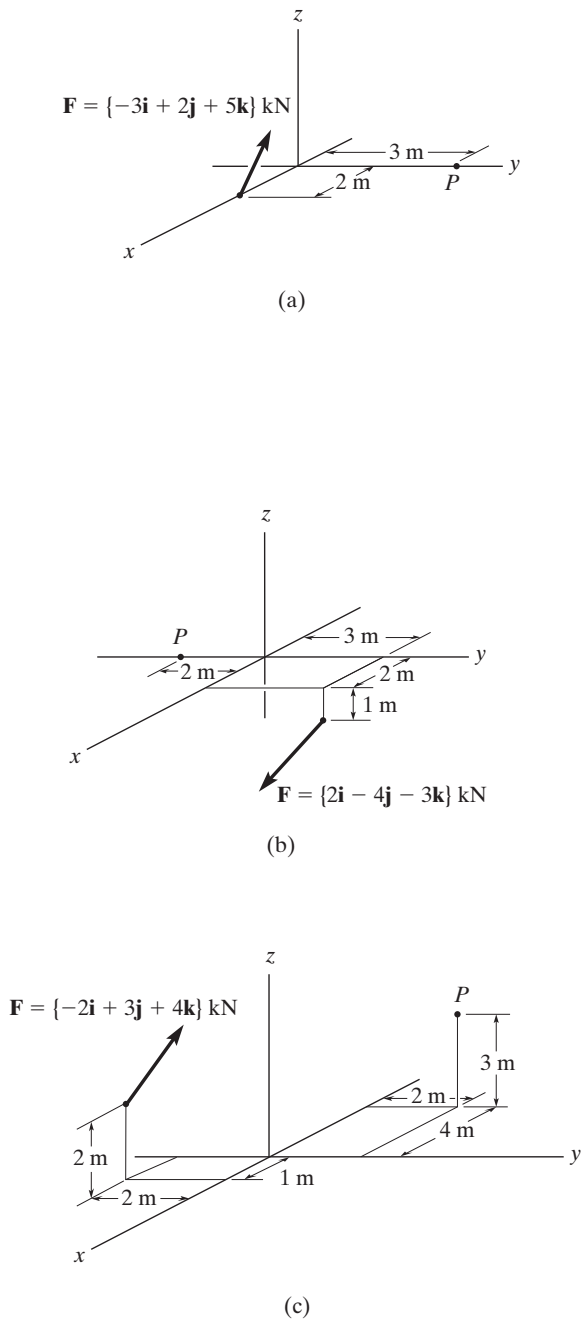

Prob. P4–2

FUNDAMENTAL PROBLEMS

F4–1. Determine the moment of the force about point O.

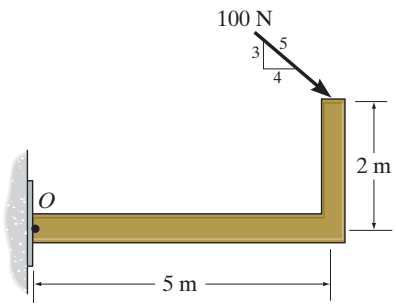

Prob. F4–1

F4–2. Determine the moment of the force about point O.

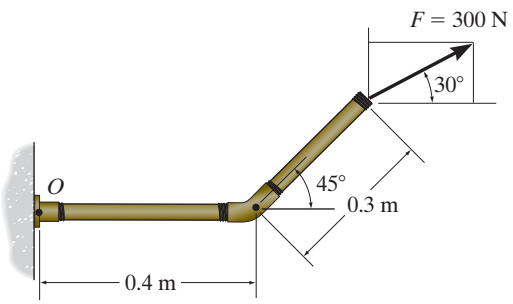

Prob. F4–2

F4–3. Determine the moment of the force about point O.

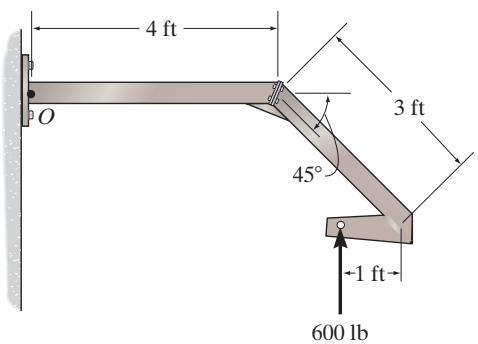

Prob. F4–3

F4–4. Determine the moment of the force about point O. Neglect the thickness of the member.

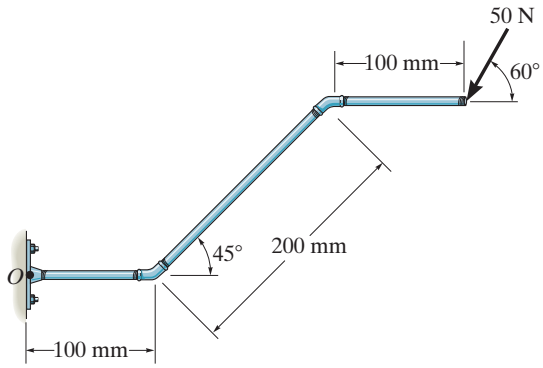

Prob. F4–4

F4–5. Determine the moment of the force about point O.

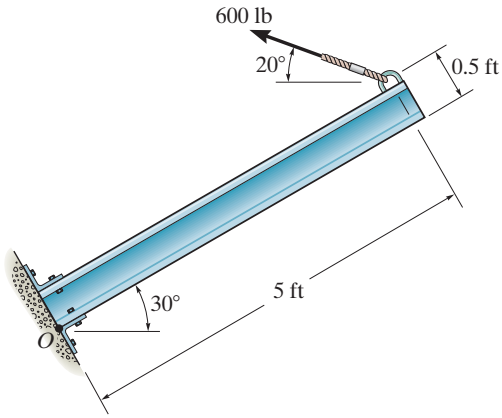

Prob. F4–5

F4–6. Determine the moment of the force about point O.

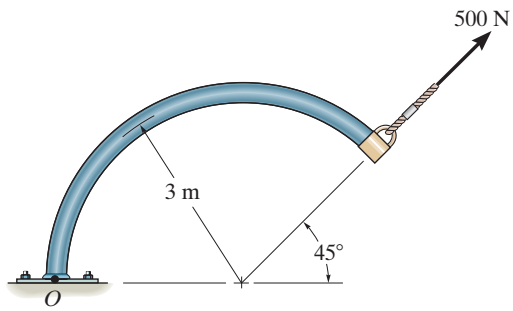

Prob. F4–6

F4–7. Determine the resultant moment produced by the forces about point O.

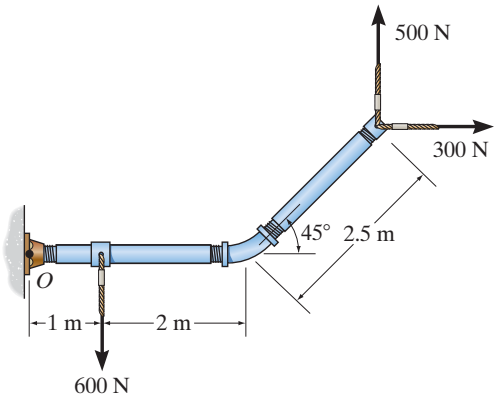

Prob. F4–7

F4–8. Determine the resultant moment produced by the forces about point O.

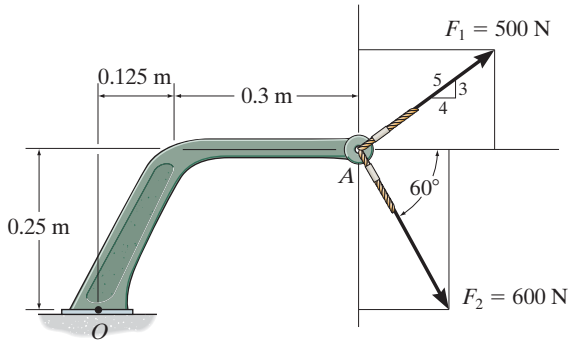

Prob. F4–8

F4–9. Determine the resultant moment produced by the forces about point O.

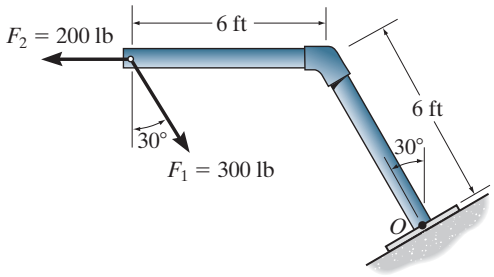

Prob. F4–9

F4–10. Determine the moment of force **F** about point O. Express the result as a Cartesian vector.

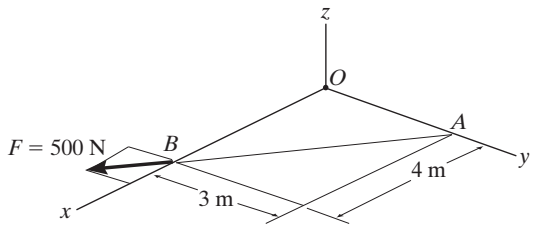

Prob. F4–10

F4–11. Determine the moment of force **F** about point O. Express the result as a Cartesian vector.

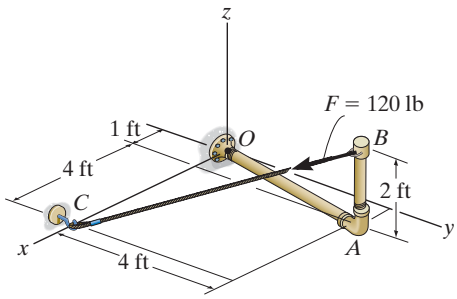

Prob. F4–11

F4–12. If the two forces $\mathbf{F}_1 = \{100\mathbf{i} - 120\mathbf{j} + 75\mathbf{k}\}$ lb and $\mathbf{F}_2 = \{-200\mathbf{i} + 250\mathbf{j} + 100\mathbf{k}\}$ lb act at A, determine the resultant moment produced by these forces about point O. Express the result as a Cartesian vector.

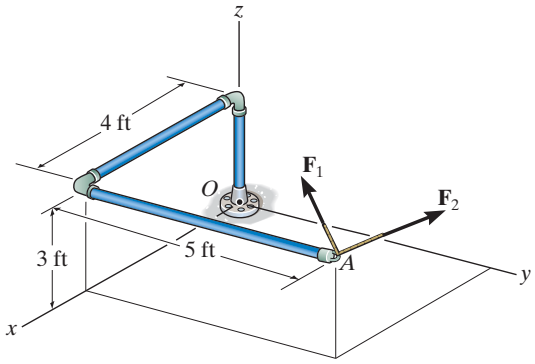

Prob. F4–12

PROBLEMS

4–1. If **A**, **B**, and **D** are given vectors, prove the distributive law for the vector cross product, i.e., $\mathbf{A} \times (\mathbf{B} + \mathbf{D}) = (\mathbf{A} \times \mathbf{B}) + (\mathbf{A} \times \mathbf{D})$.

4–2. Prove the triple scalar product identity $\mathbf{A} \cdot (\mathbf{B} \times \mathbf{C}) = (\mathbf{A} \times \mathbf{B}) \cdot \mathbf{C}$.

4–3. Given the three nonzero vectors **A**, **B**, and **C**, show that if $\mathbf{A} \cdot (\mathbf{B} \times \mathbf{C}) = 0$, the three vectors *must* lie in the same plane.

***4–4.** Determine the moment about point A of each of the three forces acting on the beam.

4–5. Determine the moment about point B of each of the three forces acting on the beam.

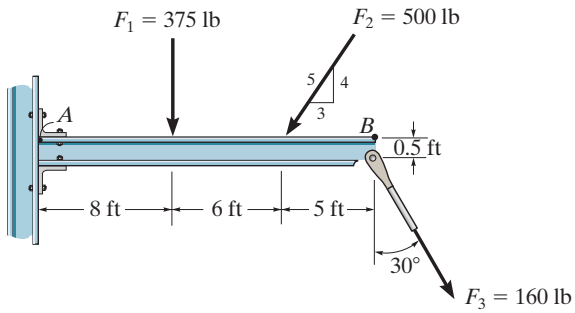

Probs. 4–4/5

4–6. The crowbar is subjected to a vertical force of $P = 25$ lb at the grip, whereas it takes a force of $F = 155$ lb at the claw to pull the nail out. Find the moment of each force about point A and determine if **P** is sufficient to pull out the nail. The crowbar contacts the board at point A.

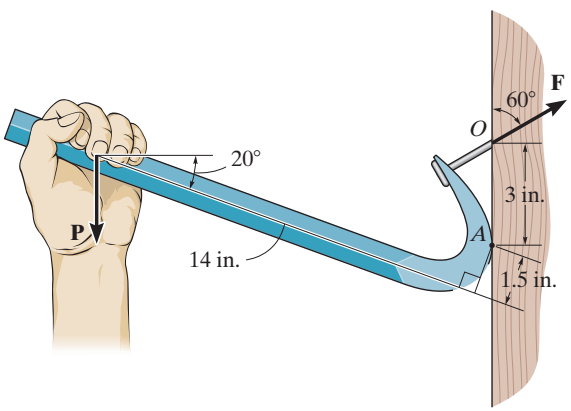

Prob. 4–6

4–7. Determine the moment of each of the three forces about point A.

***4–8.** Determine the moment of each of the three forces about point B.

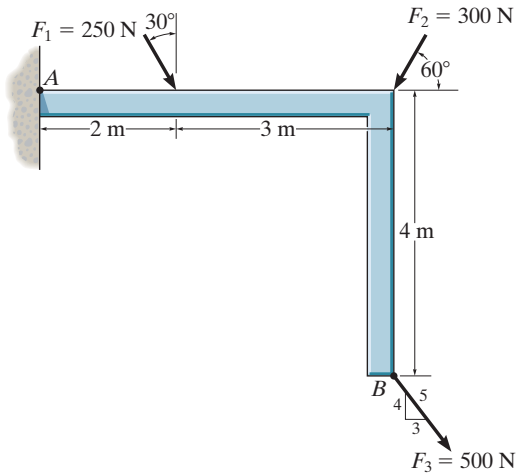

Probs. 4–7/8

4–9. Determine the moment of each force about the bolt located at A. Take $F_B = 40$ lb, $F_C = 50$ lb.

4–10. If $F_B = 30$ lb and $F_C = 45$ lb, determine the resultant moment about the bolt located at A.

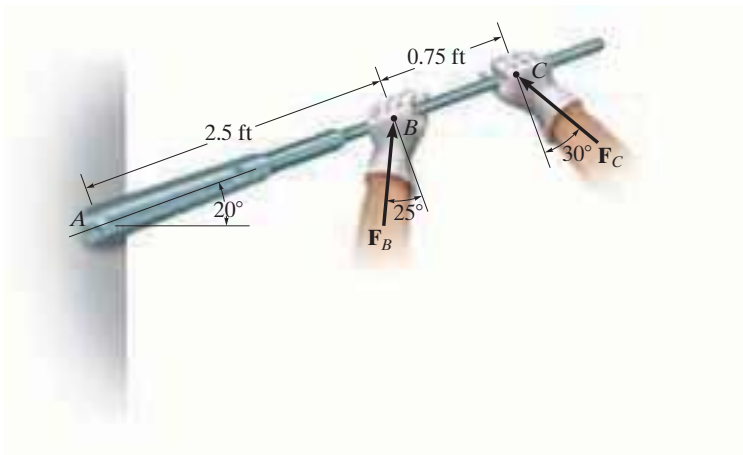

Probs. 4–9/10

4–11. The towline exerts a force of $P = 6$ kN at the end of the 8-m-long crane boom. If $\theta = 30°$, determine the placement x of the hook at B so that this force creates a maximum moment about point O. What is this moment?

***4–12.** The towline exerts a force of $P = 6$ kN at the end of the 8-m-long crane boom. If $x = 10$ m, determine the position θ of the boom so that this force creates a maximum moment about point O. What is this moment?

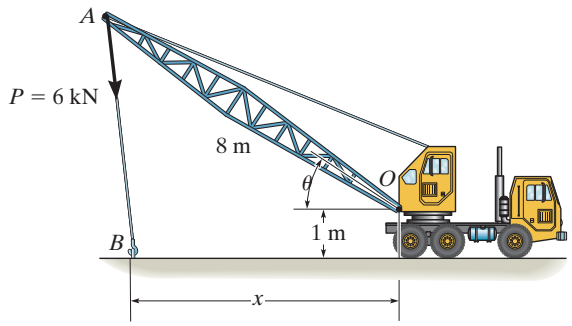

Probs. 4–11/12

4–13. The 20-N horizontal force acts on the handle of the socket wrench. What is the moment of this force about point B. Specify the coordinate direction angles α, β, γ of the moment axis.

4–14. The 20-N horizontal force acts on the handle of the socket wrench. Determine the moment of this force about point O. Specify the coordinate direction angles α, β, γ of the moment axis.

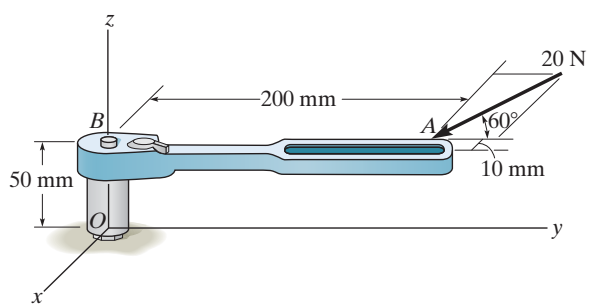

Probs. 4–13/14

4–15. Two men exert forces of $F = 80$ lb and $P = 50$ lb on the ropes. Determine the moment of each force about A. Which way will the pole rotate, clockwise or counterclockwise?

***4–16.** If the man at B exerts a force of $P = 30$ lb on his rope, determine the magnitude of the force **F** the man at C must exert to prevent the pole from rotating, i.e., so the resultant moment about A of both forces is zero.

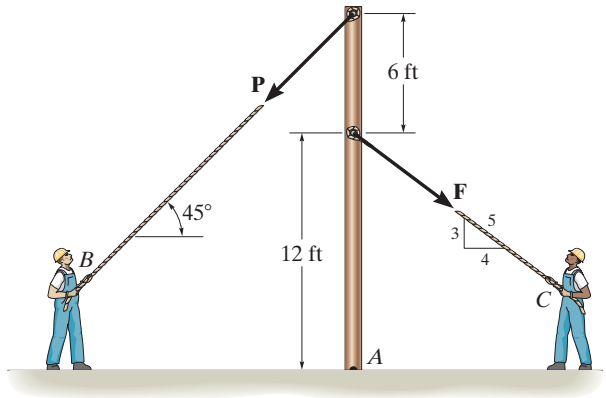

Probs. 4–15/16

4–17. The torque wrench ABC is used to measure the moment or torque applied to a bolt when the bolt is located at A and a force is applied to the handle at C. The mechanic reads the torque on the scale at B. If an extension AO of length d is used on the wrench, determine the required scale reading if the desired torque on the bolt at O is to be M.

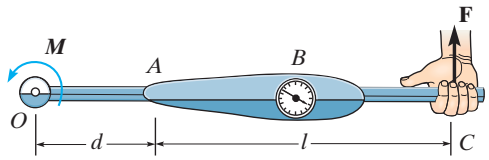

Prob. 4–17

4–18. The tongs are used to grip the ends of the drilling pipe P. Determine the torque (moment) M_P that the applied force $F = 150$ lb exerts on the pipe about point P as a function of θ. Plot this moment M_P versus θ for $0 \leq \theta \leq 90°$.

4–19. The tongs are used to grip the ends of the drilling pipe P. If a torque (moment) of $M_P = 800$ lb·ft is needed at P to turn the pipe, determine the cable force F that must be applied to the tongs. Set $\theta = 30°$.

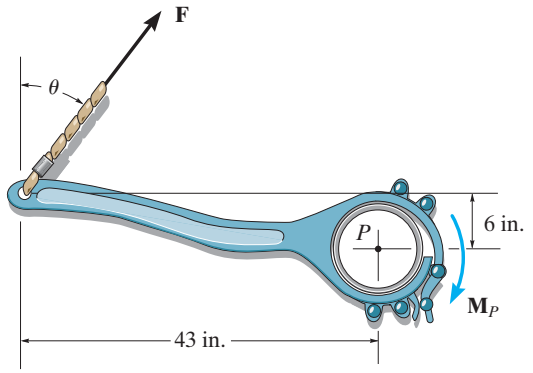

Probs. 4–18/19

***4–20.** The handle of the hammer is subjected to the force of $F = 20$ lb. Determine the moment of this force about the point A.

4–21. In order to pull out the nail at B, the force **F** exerted on the handle of the hammer must produce a clockwise moment of 500 lb·in. about point A. Determine the required magnitude of force **F**.

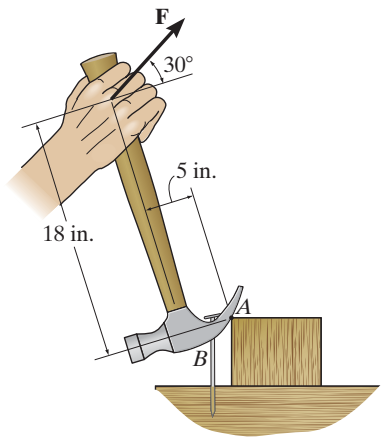

Probs. 4–20/21

4–22. Old clocks were constructed using a *fusee* B to drive the gears and watch hands. The purpose of the fusee is to increase the leverage developed by the mainspring A as it uncoils and thereby loses some of its tension. The mainspring can develop a torque (moment) $T_s = k\theta$, where $k = 0.015$ N·m/rad is the torsional stiffness and θ is the angle of twist of the spring in radians. If the torque T_f developed by the fusee is to remain constant as the mainspring winds down, and $x = 10$ mm when $\theta = 4$ rad, determine the required radius of the fusee when $\theta = 3$ rad.

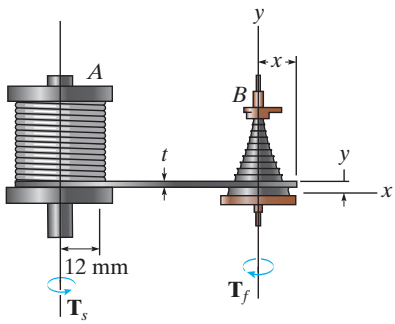

Prob. 4–22

4–23. The tower crane is used to hoist the 2-Mg load upward at constant velocity. The 1.5-Mg jib BD, 0.5-Mg jib BC, and 6-Mg counterweight C have centers of mass at G_1, G_2, and G_3, respectively. Determine the resultant moment produced by the load and the weights of the tower crane jibs about point A and about point B.

***4–24.** The tower crane is used to hoist a 2-Mg load upward at constant velocity. The 1.5-Mg jib BD and 0.5-Mg jib BC have centers of mass at G_1 and G_2, respectively. Determine the required mass of the counterweight C so that the resultant moment produced by the load and the weight of the tower crane jibs about point A is zero. The center of mass for the counterweight is located at G_3.

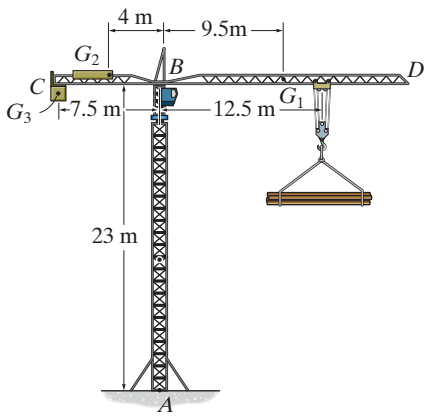

Probs. 4–23/24

Force System Resultants

CHAPTER OBJECTIVES

- To discuss the concept of the moment of a force and show how to calculate it in two and three dimensions.
- To provide a method for finding the moment of a force about a specified axis.
- To define the moment of a couple.
- To show how to find the resultant effect of a nonconcurrent force system.
- To indicate how to reduce a simple distributed loading to a resultant force acting at a specified location.

4.1 Moment of a Force—Scalar Formulation

When a force is applied to a body it will produce a tendency for the body to rotate about a point that is not on the line of action of the force. This tendency to rotate is sometimes called a ***torque***, but most often it is called the moment of a force or simply the ***moment***. For example, consider a wrench used to unscrew the bolt in Fig. 4–1*a*. If a force is applied to the handle of the wrench it will tend to turn the bolt about point O (or the z axis). The magnitude of the moment is directly proportional to the magnitude of $\mathbf{F}$ and the perpendicular distance or *moment arm* d. The larger the force or the longer the moment arm, the greater the moment or turning effect. Note that if the force $\mathbf{F}$ is applied at an angle $\theta \neq 90°$, Fig. 4–1*b*, then it will be more difficult to turn the bolt since the moment arm $d' = d \sin\theta$ will be smaller than d. If $\mathbf{F}$ is applied along the wrench, Fig. 4–1*c*, its moment arm will be zero since the line of action of $\mathbf{F}$ will intersect point O (the z axis). As a result, the moment of $\mathbf{F}$ about O is also zero and no turning can occur.

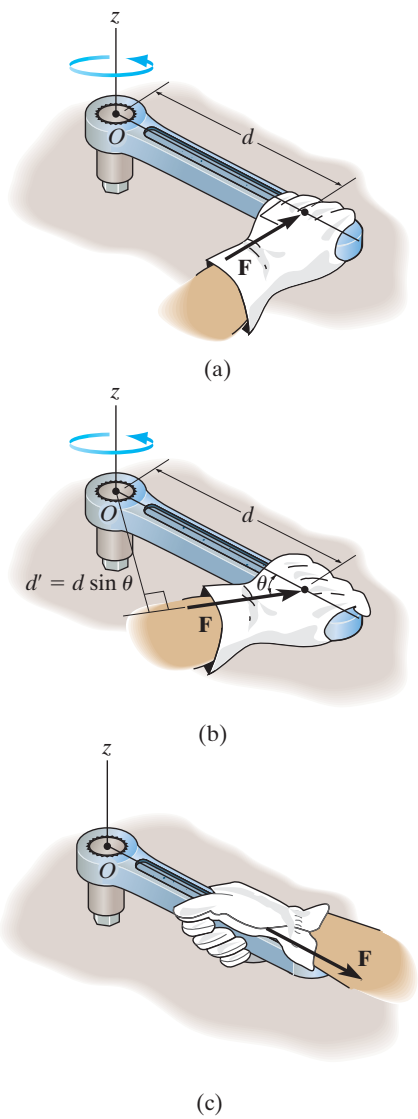

Fig. 4–1

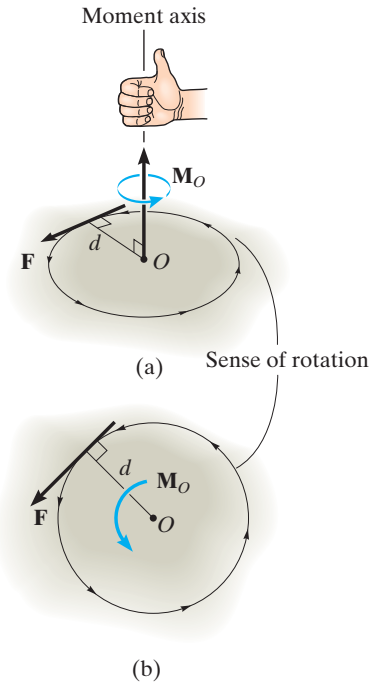

Fig. 4–2

We can generalize the above discussion and consider the force **F** and point O which lie in the shaded plane as shown in Fig. 4–2a. The moment $\mathbf{M}_O$ about point O, or about an axis passing through O and perpendicular to the plane, is a *vector quantity* since it has a specified magnitude and direction.

Magnitude. The magnitude of $\mathbf{M}_O$ is

$$\boxed{M_O = Fd} \tag{4–1}$$

where d is the ***moment arm*** or *perpendicular distance* from the axis at point O to the line of action of the force. Units of moment magnitude consist of force times distance, e.g., N · m or lb · ft.

Direction. The direction of $\mathbf{M}_O$ is defined by its ***moment axis***, which is perpendicular to the plane that contains the force **F** and its moment arm d. The right-hand rule is used to establish the sense of direction of $\mathbf{M}_O$. According to this rule, the natural curl of the fingers of the right hand, as they are drawn towards the palm, represent the rotation, or if no movement is possible, there is a tendency for rotation caused by the moment. As this action is performed, the thumb of the right hand will give the directional sense of $\mathbf{M}_O$, Fig. 4–2a. Notice that the moment vector is represented three-dimensionally by a curl around an arrow. In two dimensions this vector is represented only by the curl as in Fig. 4–2b. Since in this case the moment will tend to cause a counterclockwise rotation, the moment vector is actually directed out of the page.

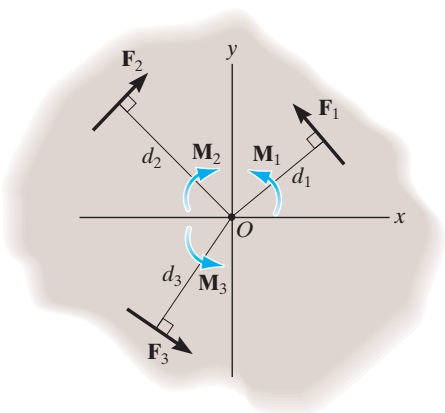

Fig. 4–3

Resultant Moment. For two-dimensional problems, where all the forces lie within the x–y plane, Fig. 4–3, the resultant moment $(\mathbf{M}_R)_O$ about point O (the z axis) can be determined by *finding the algebraic sum* of the moments caused by all the forces in the system. As a convention, we will generally consider *positive moments* as *counterclockwise* since they are directed along the positive z axis (out of the page). *Clockwise moments* will be *negative*. Doing this, the directional sense of each moment can be represented by a *plus* or *minus* sign. Using this sign convention, with a symbolic curl to define the positive direction, the resultant moment in Fig. 4–3 is therefore

$$\circlearrowleft + (M_R)_o = \Sigma Fd; \qquad (M_R)_o = F_1 d_1 - F_2 d_2 + F_3 d_3$$

If the numerical result of this sum is a positive scalar, $(\mathbf{M}_R)_o$ will be a counterclockwise moment (out of the page); and if the result is negative, $(\mathbf{M}_R)_o$ will be a clockwise moment (into the page).

EXAMPLE 4.1

For each case illustrated in Fig. 4–4, determine the moment of the force about point O.

SOLUTION *(SCALAR ANALYSIS)*

The line of action of each force is extended as a dashed line in order to establish the moment arm d. Also illustrated is the tendency of rotation of the member as caused by the force. Furthermore, the orbit of the force about O is shown as a colored curl. Thus,

Fig. 4–4*a* $\quad M_O = (100\text{ N})(2\text{ m}) = 200\text{ N}\cdot\text{m}\,\curvearrowright$ *Ans.*

Fig. 4–4*b* $\quad M_O = (50\text{ N})(0.75\text{ m}) = 37.5\text{ N}\cdot\text{m}\,\curvearrowright$ *Ans.*

Fig. 4–4*c* $\quad M_O = (40\text{ lb})(4\text{ ft} + 2\cos 30^\circ\text{ ft}) = 229\text{ lb}\cdot\text{ft}\,\curvearrowright$ *Ans.*

Fig. 4–4*d* $\quad M_O = (60\text{ lb})(1\sin 45^\circ\text{ ft}) = 42.4\text{ lb}\cdot\text{ft}\,\curvearrowleft$ *Ans.*

Fig. 4–4*e* $\quad M_O = (7\text{ kN})(4\text{ m} - 1\text{ m}) = 21.0\text{ kN}\cdot\text{m}\,\curvearrowleft$ *Ans.*

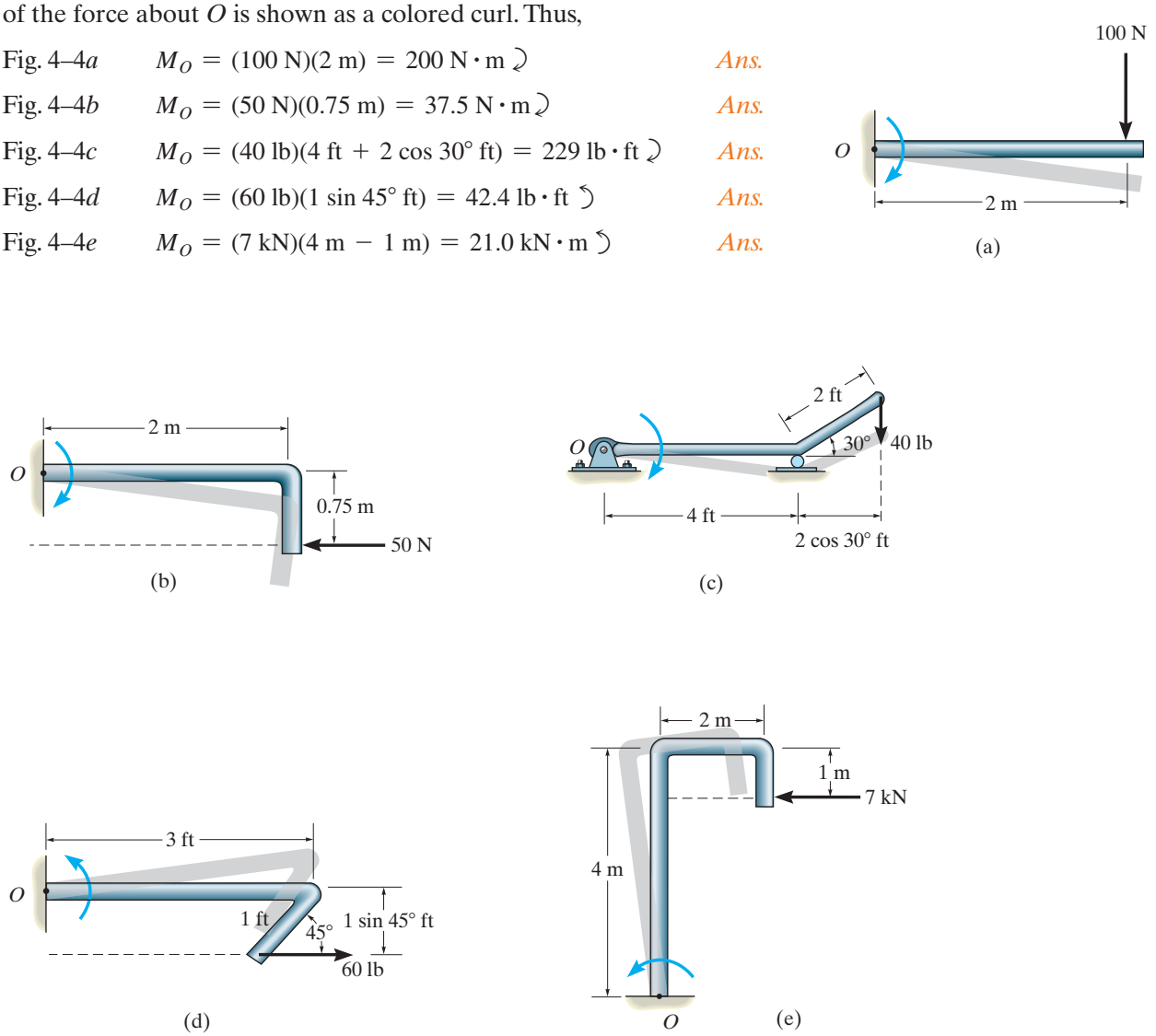

Fig. 4–4

EXAMPLE 4.2

Determine the resultant moment of the four forces acting on the rod shown in Fig. 4–5 about point O.

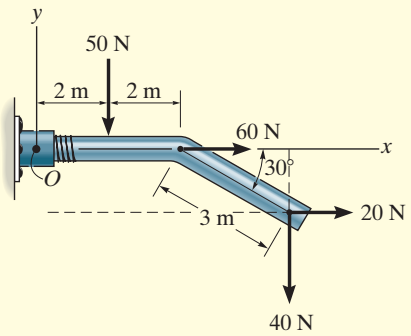

Fig. 4–5

SOLUTION

Assuming that positive moments act in the $+\mathbf{k}$ direction, i.e., counterclockwise, we have

$$\circlearrowleft + (M_R)_O = \Sigma Fd;$$

$$(M_R)_O = -50\text{ N}(2\text{ m}) + 60\text{ N}(0) + 20\text{ N}(3\sin 30^\circ\text{ m})$$

$$-40\text{ N}(4\text{ m} + 3\cos 30^\circ\text{ m})$$

$$(M_R)_O = -334\text{ N}\cdot\text{m} = 334\text{ N}\cdot\text{m}\circlearrowright \qquad \textit{Ans.}$$

For this calculation, note how the moment-arm distances for the 20-N and 40-N forces are established from the extended (dashed) lines of action of each of these forces.

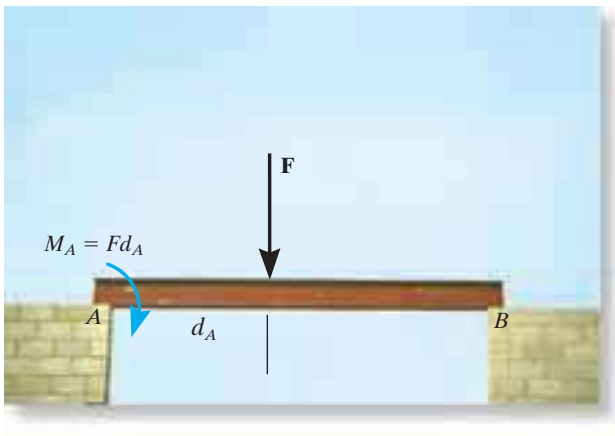

As illustrated by the example problems, the moment of a force does not always cause a rotation. For example, the force **F** tends to rotate the beam clockwise about its support at A with a moment $M_A = Fd_A$. The actual rotation would occur if the support at B were removed. (© Russell C. Hibbeler)

The ability to remove the nail will require the moment of $\mathbf{F}_H$ about point O to be larger than the moment of the force $\mathbf{F}_N$ about O that is needed to pull the nail out. (© Russell C. Hibbeler)

PRELIMINARY PROBLEM

P4–5. In each case, determine the x and y components of the resultant force and the resultant couple moment at point O.

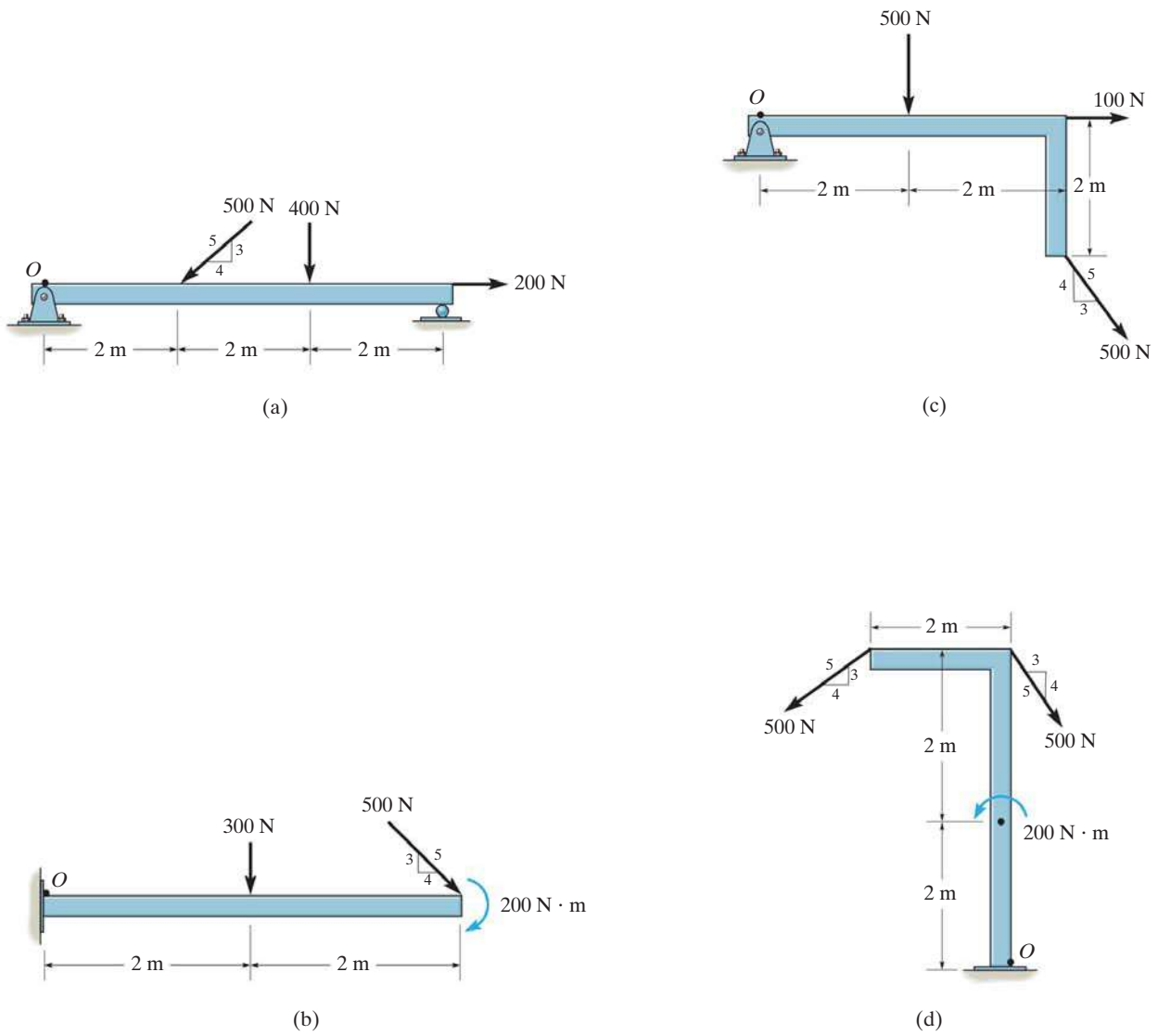

Prob. P4–5

FUNDAMENTAL PROBLEMS

F4–25. Replace the loading system by an equivalent resultant force and couple moment acting at point A.

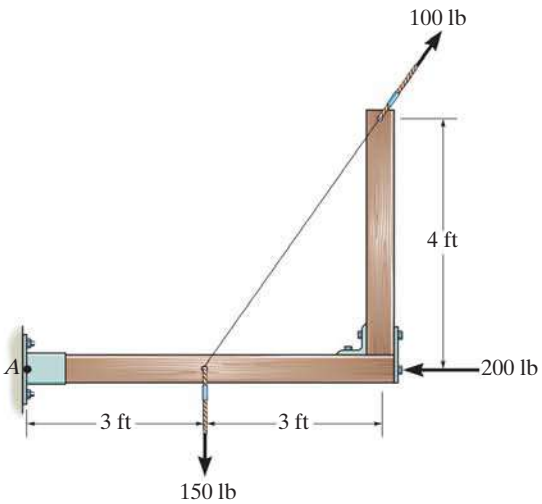

Prob. F4–25

F4–26. Replace the loading system by an equivalent resultant force and couple moment acting at point A.

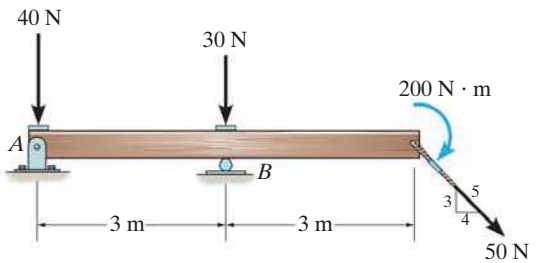

Prob. F4–26

F4–27. Replace the loading system by an equivalent resultant force and couple moment acting at point A.

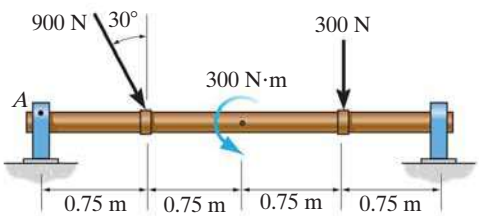

Prob. F4–27

F4–28. Replace the loading system by an equivalent resultant force and couple moment acting at point A.

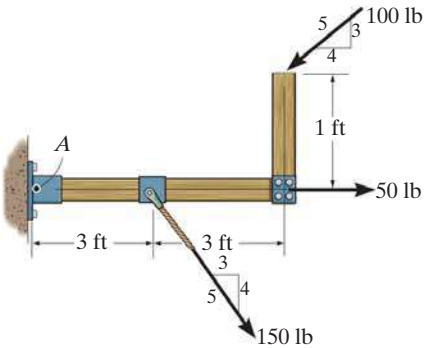

Prob. F4–28

F4–29. Replace the loading system by an equivalent resultant force and couple moment acting at point O.

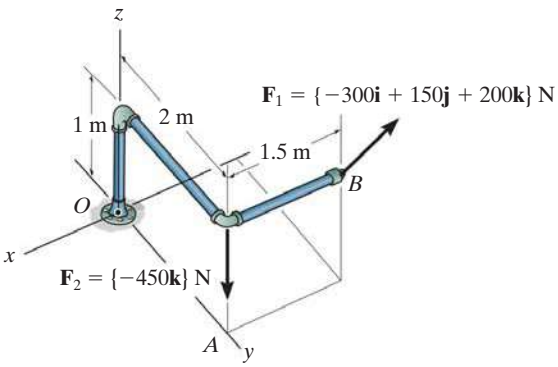

Prob. F4–29

F4–30. Replace the loading system by an equivalent resultant force and couple moment acting at point O.

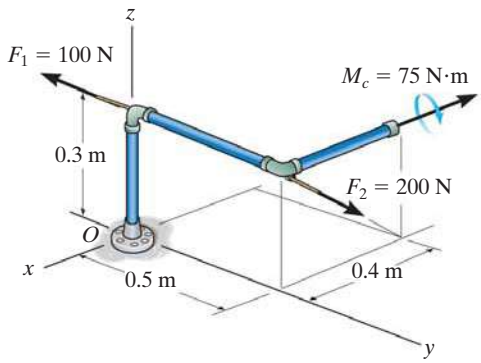

Prob. F4–30

FUNDAMENTAL PROBLEMS

4–97. Replace the force system by an equivalent resultant force and couple moment at point O.

4–98. Replace the force system by an equivalent resultant force and couple moment at point P.

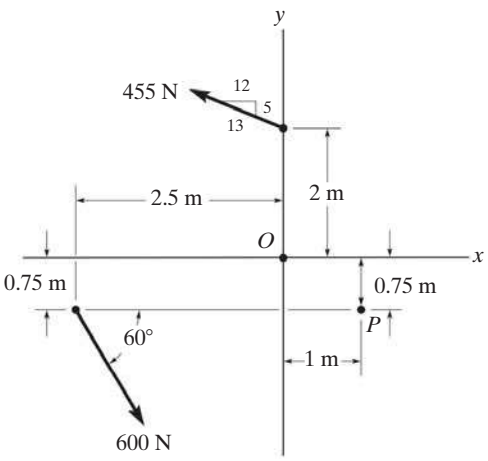

Probs. 4–97/98

4–99. Replace the force system acting on the beam by an equivalent force and couple moment at point A.

***4–100.** Replace the force system acting on the beam by an equivalent force and couple moment at point B.

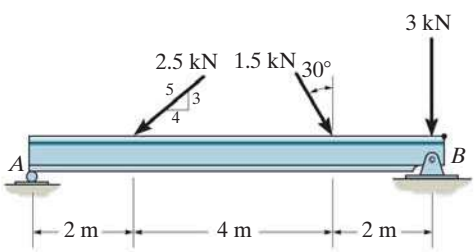

Probs. 4–99/100

4–101. Replace the loading system acting on the beam by an equivalent resultant force and couple moment at point O.

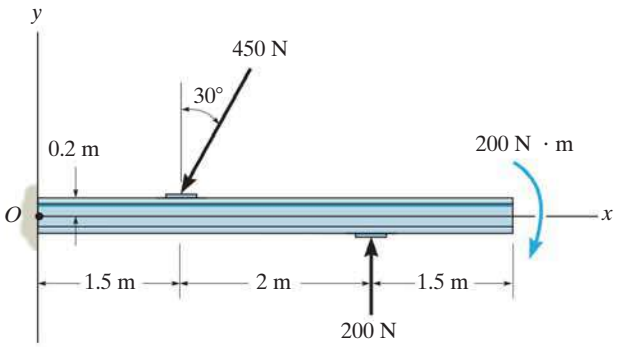

Prob. 4–101

4–102. Replace the loading system acting on the post by an equivalent resultant force and couple moment at point A.

4–103. Replace the loading system acting on the post by an equivalent resultant force and couple moment at point B.

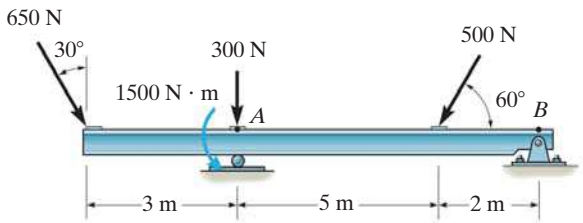

Probs. 4–102/103

***4–104.** Replace the force system acting on the post by a resultant force and couple moment at point O.

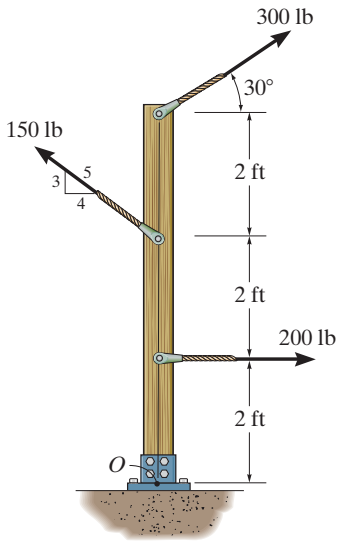

Prob. 4–104

4–105. Replace the force system acting on the frame by an equivalent resultant force and couple moment acting at point A.

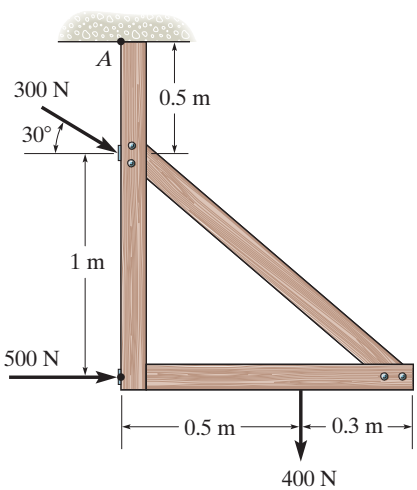

Prob. 4–105

4–106. The forces $\mathbf{F}_1 = \{-4\mathbf{i} + 2\mathbf{j} - 3\mathbf{k}\}$ kN and $\mathbf{F}_2 = \{3\mathbf{i} - 4\mathbf{j} - 2\mathbf{k}\}$ kN act on the end of the beam. Replace these forces by an equivalent force and couple moment acting at point O.

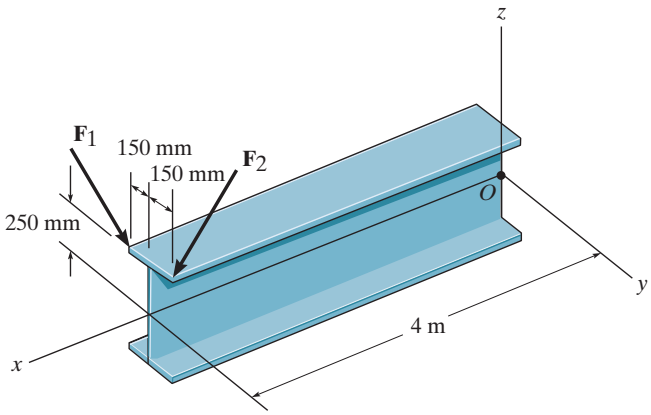

Prob. 4–106

4–107. A biomechanical model of the lumbar region of the human trunk is shown. The forces acting in the four muscle groups consist of $F_R = 35$ N for the rectus, $F_O = 45$ N for the oblique, $F_L = 23$ N for the lumbar latissimus dorsi, and $F_E = 32$ N for the erector spinae. These loadings are symmetric with respect to the y–z plane. Replace this system of parallel forces by an equivalent force and couple moment acting at the spine, point O. Express the results in Cartesian vector form.

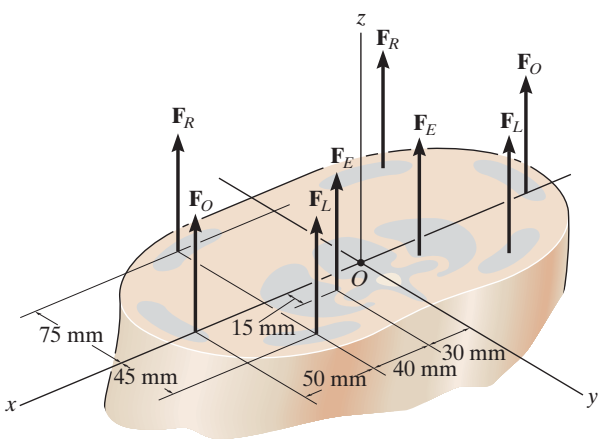

Prob. 4–107

EXAMPLE 4.17

Replace the force and couple moment system acting on the beam in Fig. 4–44*a* by an equivalent resultant force, and find where its line of action intersects the beam, measured from point O.

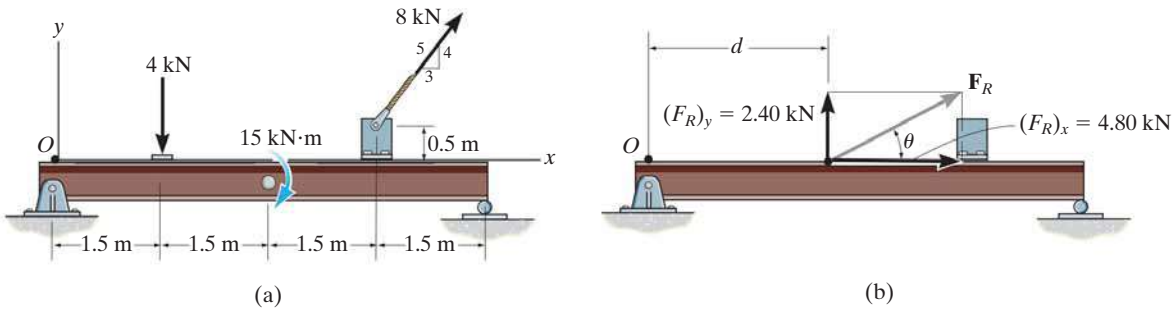

Fig. 4–44

SOLUTION

Force Summation. Summing the force components,

$$\overset{+}{\rightarrow} (F_R)_x = \Sigma F_x; \qquad (F_R)_x = 8\text{ kN}\left(\tfrac{3}{5}\right) = 4.80\text{ kN} \rightarrow$$

$$+\uparrow (F_R)_y = \Sigma F_y; \qquad (F_R)_y = -4\text{ kN} + 8\text{ kN}\left(\tfrac{4}{5}\right) = 2.40\text{ kN}\uparrow$$

From Fig. 4–44*b*, the magnitude of $\mathbf{F}_R$ is

$$F_R = \sqrt{(4.80\text{ kN})^2 + (2.40\text{ kN})^2} = 5.37\text{ kN} \qquad \textit{Ans.}$$

The angle θ is

$$\theta = \tan^{-1}\left(\frac{2.40\text{ kN}}{4.80\text{ kN}}\right) = 26.6° \qquad \textit{Ans.}$$

Moment Summation. We must equate the moment of $\mathbf{F}_R$ about point O in Fig. 4–44*b* to the sum of the moments of the force and couple moment system about point O in Fig. 4–44*a*. Since the line of action of $(\mathbf{F}_R)_x$ acts through point O, *only* $(\mathbf{F}_R)_y$ *produces a moment* about this point. Thus,

$$\circlearrowleft + (M_R)_O = \Sigma M_O; \qquad 2.40\text{ kN}(d) = -(4\text{ kN})(1.5\text{ m}) - 15\text{ kN}\cdot\text{m}$$
$$-\left[8\text{ kN}\left(\tfrac{3}{5}\right)\right](0.5\text{ m}) + \left[8\text{ kN}\left(\tfrac{4}{5}\right)\right](4.5\text{ m})$$

$$d = 2.25\text{ m} \qquad \textit{Ans.}$$

EXAMPLE 4.11 8

The jib crane shown in Fig. 4–45*a* is subjected to three coplanar forces. Replace this loading by an equivalent resultant force and specify where the resultant's line of action intersects the column *AB* and boom *BC*.

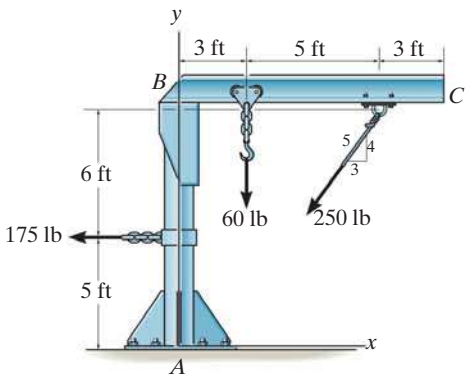

(a)

SOLUTION

Force Summation. Resolving the 250-lb force into x and y components and summing the force components yields

$$\overset{+}{\rightarrow}(F_R)_x = \Sigma F_x; \quad (F_R)_x = -250\text{ lb}\left(\tfrac{3}{5}\right) - 175\text{ lb} = -325\text{ lb} = 325\text{ lb}\leftarrow$$

$$+\uparrow(F_R)_y = \Sigma F_y; \quad (F_R)_y = -250\text{ lb}\left(\tfrac{4}{5}\right) - 60\text{ lb} = -260\text{ lb} = 260\text{ lb}\downarrow$$

As shown by the vector addition in Fig. 4–45*b*,

$$F_R = \sqrt{(325\text{ lb})^2 + (260\text{ lb})^2} = 416\text{ lb} \qquad \textit{Ans.}$$

$$\theta = \tan^{-1}\left(\frac{260\text{ lb}}{325\text{ lb}}\right) = 38.7^\circ \qquad \textit{Ans.}$$

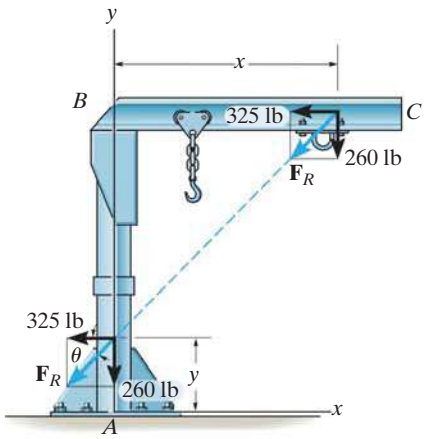

(b)

Fig. 4–45

Moment Summation. Moments will be summed about point A. Assuming the line of action of $\mathbf{F}_R$ *intersects* AB at a distance y from A, Fig. 4–45*b*, we have

$$\circlearrowleft + (M_R)_A = \Sigma M_A; \qquad 325\text{ lb}\,(y) + 260\text{ lb}\,(0)$$

$$= 175\text{ lb}\,(5\text{ ft}) - 60\text{ lb}\,(3\text{ ft}) + 250\text{ lb}\left(\tfrac{3}{5}\right)(11\text{ ft}) - 250\text{ lb}\left(\tfrac{4}{5}\right)(8\text{ ft})$$

$$y = 2.29\text{ ft} \qquad \textit{Ans.}$$

By the principle of transmissibility, $\mathbf{F}_R$ can be placed at a distance x where it intersects BC, Fig. 4–45*b*. In this case we have

$$\circlearrowleft + (M_R)_A = \Sigma M_A; \qquad 325\text{ lb}\,(11\text{ ft}) - 260\text{ lb}\,(x)$$

$$= 175\text{ lb}\,(5\text{ ft}) - 60\text{ lb}\,(3\text{ ft}) + 250\text{ lb}\left(\tfrac{3}{5}\right)(11\text{ ft}) - 250\text{ lb}\left(\tfrac{4}{5}\right)(8\text{ ft})$$

$$x = 10.9\text{ ft} \qquad \textit{Ans.}$$

EXAMPLE 4.19

The slab in Fig. 4–46*a* is subjected to four parallel forces. Determine the magnitude and direction of a resultant force equivalent to the given force system, and locate its point of application on the slab.

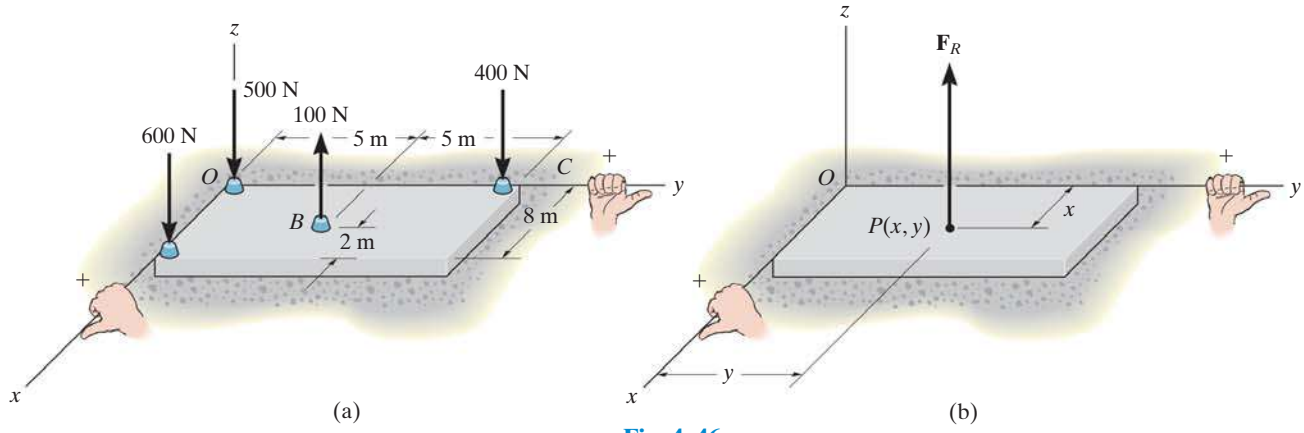

Fig. 4–46

SOLUTION *(SCALAR ANALYSIS)*

Force Summation. From Fig. 4–46*a*, the resultant force is

$$+\uparrow F_R = \Sigma F; \qquad F_R = -600\text{ N} + 100\text{ N} - 400\text{ N} - 500\text{ N}$$

$$= -1400\text{ N} = 1400\text{ N}\downarrow \qquad \textit{Ans.}$$

Moment Summation. We require the moment about the x axis of the resultant force, Fig. 4–46*b*, to be equal to the sum of the moments about the x axis of all the forces in the system, Fig. 4–46*a*. The moment arms are determined from the y coordinates, since these coordinates represent the *perpendicular distances* from the x axis to the lines of action of the forces. Using the right-hand rule, we have

$$(M_R)_x = \Sigma M_x;$$

$$-(1400\text{ N})y = 600\text{ N}(0) + 100\text{ N}(5\text{ m}) - 400\text{ N}(10\text{ m}) + 500\text{ N}(0)$$

$$-1400y = -3500 \qquad y = 2.50\text{ m} \qquad \textit{Ans.}$$

In a similar manner, a moment equation can be written about the y axis using moment arms defined by the x coordinates of each force.

$$(M_R)_y = \Sigma M_y;$$

$$(1400\text{ N})x = 600\text{ N}(8\text{ m}) - 100\text{ N}(6\text{ m}) + 400\text{ N}(0) + 500\text{ N}(0)$$

$$1400x = 4200$$

$$x = 3\text{ m} \qquad \textit{Ans.}$$

NOTE: A force of $F_R = 1400$ N placed at point $P(3.00\text{ m}, 2.50\text{ m})$ on the slab, Fig. 4–46*b*, is therefore equivalent to the parallel force system acting on the slab in Fig. 4–46*a*.

EXAMPLE 4.20

Replace the force system in Fig. 4–47*a* by an equivalent resultant force and specify its point of application on the pedestal.

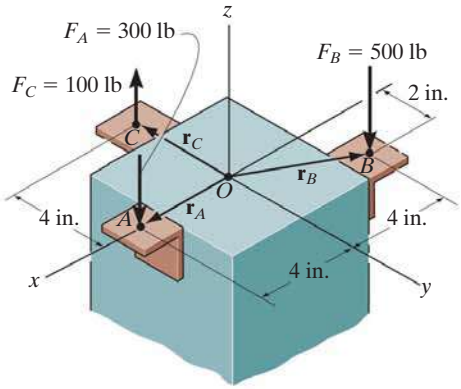

(a)

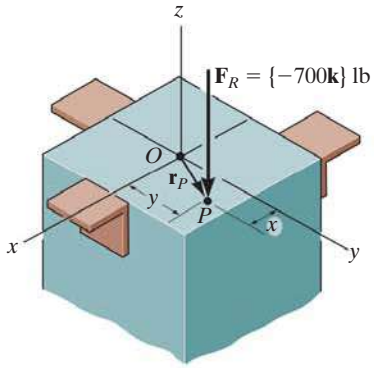

(b)

Fig. 4–47

SOLUTION

Force Summation. Here we will demonstrate a vector analysis. Summing forces,

$$\mathbf{F}_R = \Sigma\mathbf{F};\ \mathbf{F}_R = \mathbf{F}_A + \mathbf{F}_B + \mathbf{F}_C$$
$$= \{-300\mathbf{k}\}\text{ lb} + \{-500\mathbf{k}\}\text{ lb} + \{100\mathbf{k}\}\text{ lb}$$
$$= \{-700\mathbf{k}\}\text{ lb} \qquad \textit{Ans.}$$

Location. Moments will be summed about point O. The resultant force $\mathbf{F}_R$ is assumed to act through point $P\,(x, y, 0)$, Fig. 4–47*b*. Thus

$$(\mathbf{M}_R)_O = \Sigma\mathbf{M}_O;$$
$$\mathbf{r}_P \times \mathbf{F}_R = (\mathbf{r}_A \times \mathbf{F}_A) + (\mathbf{r}_B \times \mathbf{F}_B) + (\mathbf{r}_C \times \mathbf{F}_C)$$
$$(x\mathbf{i} + y\mathbf{j}) \times (-700\mathbf{k}) = [(4\mathbf{i}) \times (-300\mathbf{k})]$$
$$+ [(-4\mathbf{i} + 2\mathbf{j}) \times (-500\mathbf{k})] + [(-4\mathbf{j}) \times (100\mathbf{k})]$$
$$-700x(\mathbf{i} \times \mathbf{k}) - 700y(\mathbf{j} \times \mathbf{k}) = -1200(\mathbf{i} \times \mathbf{k}) + 2000(\mathbf{i} \times \mathbf{k})$$
$$- 1000(\mathbf{j} \times \mathbf{k}) - 400(\mathbf{j} \times \mathbf{k})$$
$$700x\mathbf{j} - 700y\mathbf{i} = 1200\mathbf{j} - 2000\mathbf{j} - 1000\mathbf{i} - 400\mathbf{i}$$

Equating the **i** and **j** components,

$$-700y = -1400 \qquad (1)$$
$$y = 2\text{ in.} \qquad \textit{Ans.}$$
$$700x = -800 \qquad (2)$$
$$x = -1.14\text{ in.} \qquad \textit{Ans.}$$

The negative sign indicates that the x coordinate of point P is negative.

NOTE: It is also possible to establish Eq. 1 and 2 directly by summing moments about the x and y axes. Using the right-hand rule, we have

$$(M_R)_x = \Sigma M_x; \qquad -700y = -100\text{ lb}(4\text{ in.}) - 500\text{ lb}(2\text{ in.})$$
$$(M_R)_y = \Sigma M_y; \qquad 700x = 300\text{ lb}(4\text{ in.}) - 500\text{ lb}(4\text{ in.})$$

PRELIMINARY PROBLEMS

P4–6. In each case, determine the x and y components of the resultant force and specify the distance where this force acts from point O.

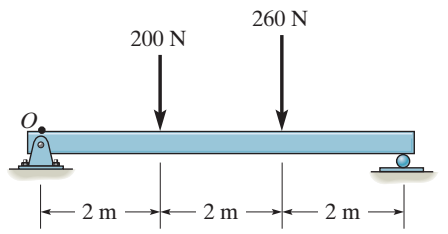

(a)

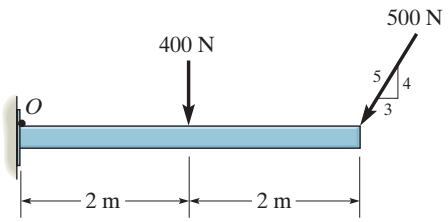

(b)

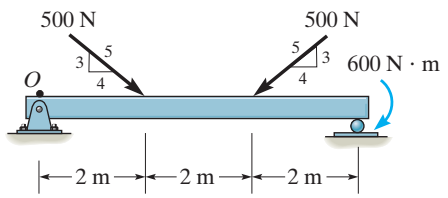

(c)

Prob. P4–6

P4–7. In each case, determine the resultant force and specify its coordinates x and y where it acts on the x–y plane.

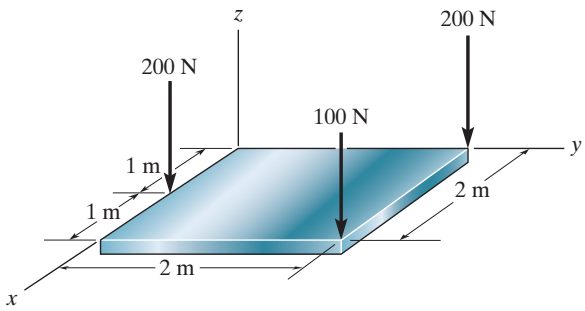

(a)

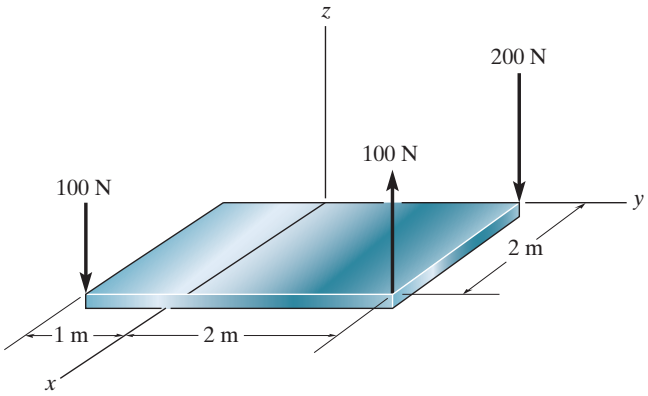

(b)

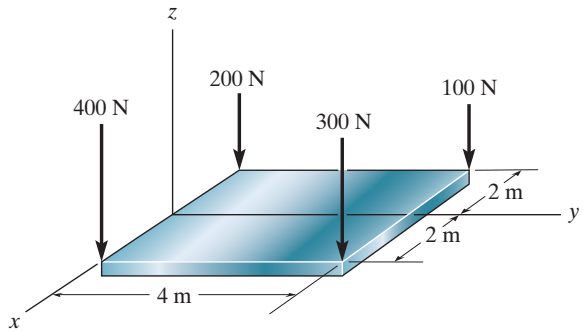

(c)

Prob. P4–7

FUNDAMENTAL PROBLEMS

F4–31. Replace the loading system by an equivalent resultant force and specify where the resultant's line of action intersects the beam measured from O.

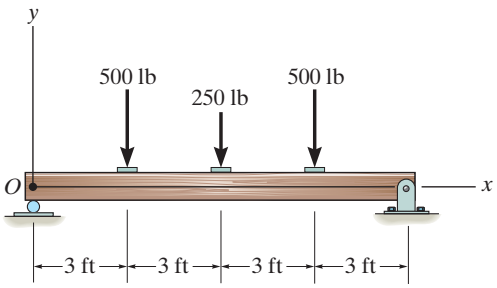

Prob. F4–31

F4–32. Replace the loading system by an equivalent resultant force and specify where the resultant's line of action intersects the member measured from A.

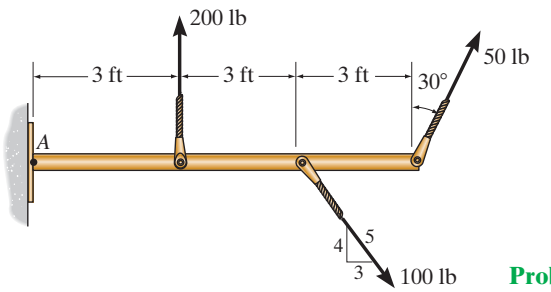

Prob. F4–32

F4–33. Replace the loading system by an equivalent resultant force and specify where the resultant's line of action intersects the horizontal segment of the member measured from A.

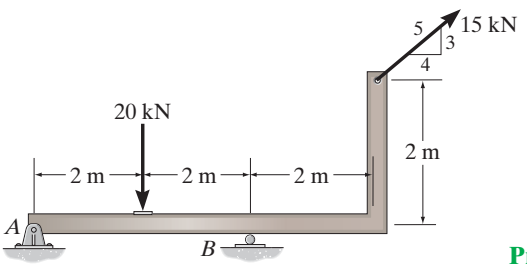

Prob. F4–33

F4–34. Replace the loading system by an equivalent resultant force and specify where the resultant's line of action intersects the member AB measured from A.

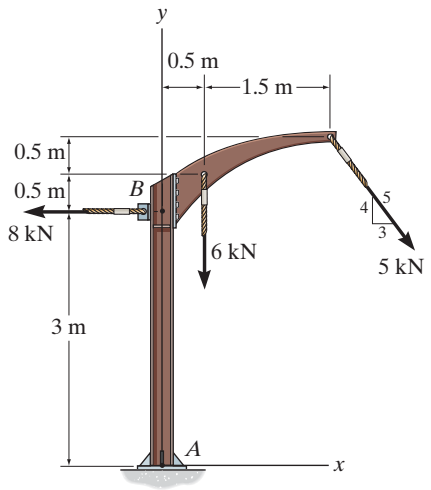

Prob. F4–34

F4–35. Replace the loading shown by an equivalent single resultant force and specify the x and y coordinates of its line of action.

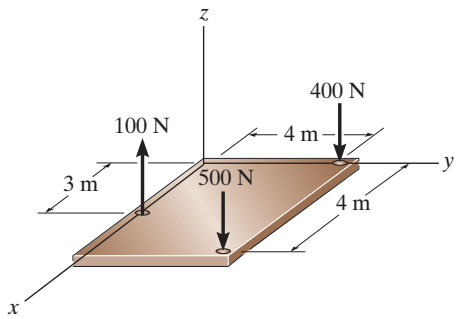

Prob. F4–35

F4–36. Replace the loading shown by an equivalent single resultant force and specify the x and y coordinates of its line of action.

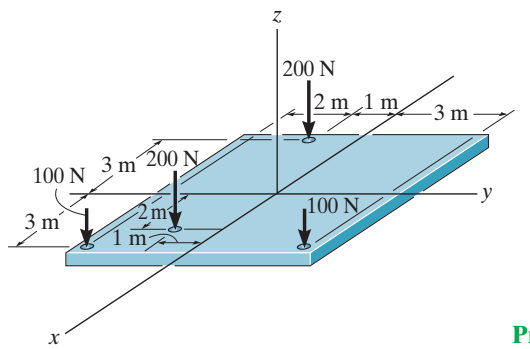

Prob. F4–36

PROBLEMS

4–113. The weights of the various components of the truck are shown. Replace this system of forces by an equivalent resultant force and specify its location measured from B.

4–114. The weights of the various components of the truck are shown. Replace this system of forces by an equivalent resultant force and specify its location measured from point A.

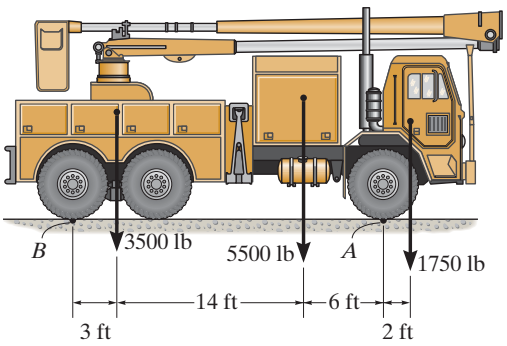

Probs. 4–113/114

4–115. Replace the three forces acting on the shaft by a single resultant force. Specify where the force acts, measured from end A.

***4–116.** Replace the three forces acting on the shaft by a single resultant force. Specify where the force acts, measured from end B.

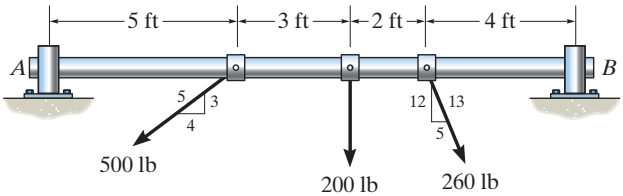

Probs. 4–115/116

4–117. Replace the loading acting on the beam by a single resultant force. Specify where the force acts, measured from end A.

4–118. Replace the loading acting on the beam by a single resultant force. Specify where the force acts, measured from B.

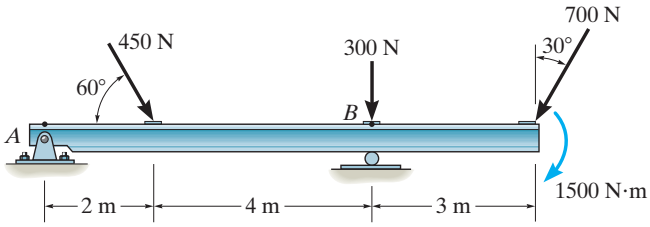

Probs. 4–117/118

4–119. Replace the loading on the frame by a single resultant force. Specify where its line of action intersects a vertical line along member AB, measured from A.

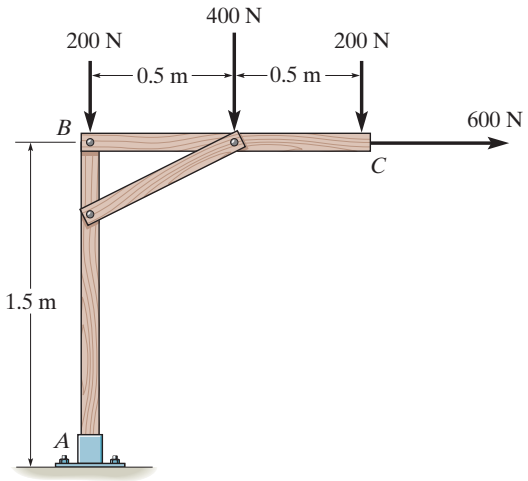

Prob. 4–119

***4–120.** Replace the loading on the frame by a single resultant force. Specify where its line of action intersects a vertical line along member AB, measured from A.

4–121. Replace the loading on the frame by a single resultant force. Specify where its line of action intersects a horizontal line along member CB, measured from end C.

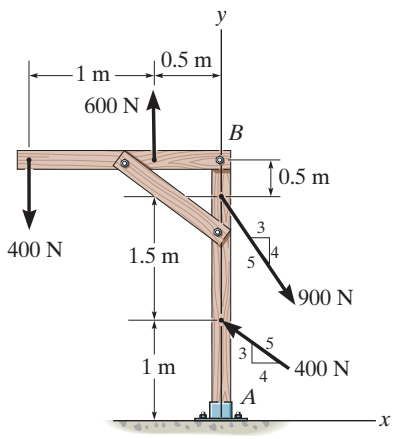

Probs. 4–120/121

4–122. Replace the force system acting on the post by a resultant force, and specify where its line of action intersects the post AB measured from point A.

4–123. Replace the force system acting on the post by a resultant force, and specify where its line of action intersects the post AB measured from point B.

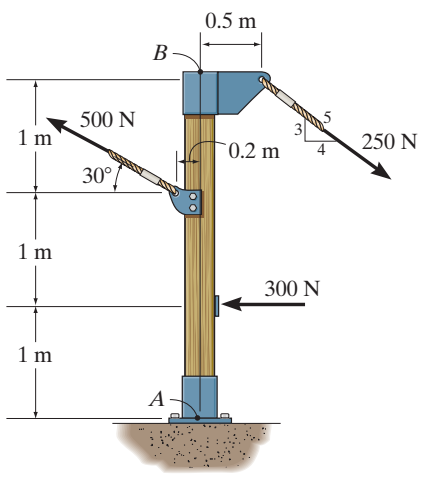

Probs. 4–122/123

***4–124.** Replace the parallel force system acting on the plate by a resultant force and specify its location on the x-z plane.

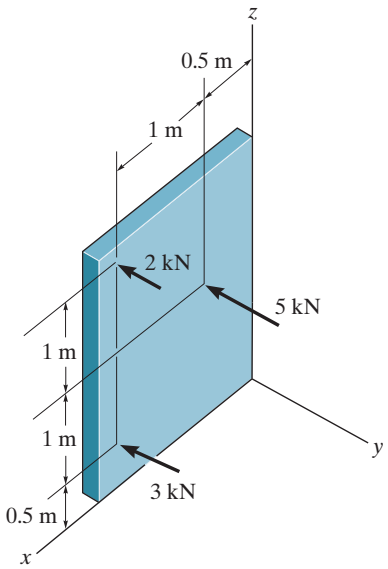

Prob. 4–124

4–125. Replace the force and couple system acting on the frame by an equivalent resultant force and specify where the resultant's line of action intersects member AB, measured from A.

4–126. Replace the force and couple system acting on the frame by an equivalent resultant force and specify where the resultant's line of action intersects member BC, measured from B.

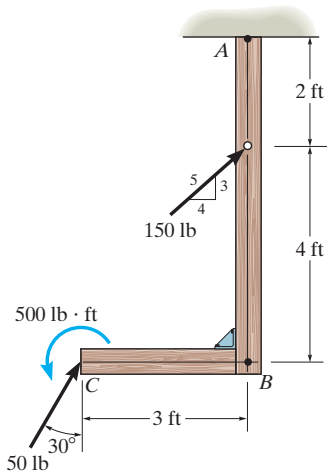

Probs. 4–125/126

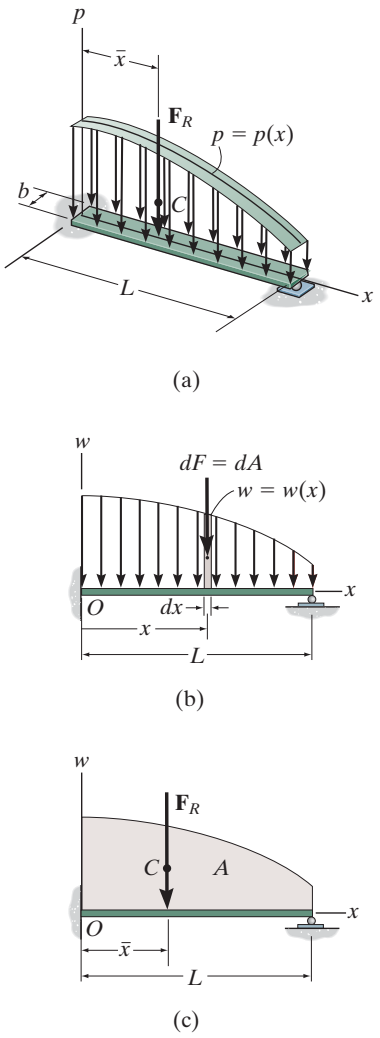

Fig. 4–48

4.9 Reduction of a Simple Distributed Loading

Sometimes, a body may be subjected to a loading that is distributed over its surface. For example, the pressure of the wind on the face of a sign, the pressure of water within a tank, or the weight of sand on the floor of a storage container, are all ***distributed loadings***. The pressure exerted at each point on the surface indicates the intensity of the loading. It is measured using pascals Pa (or N/m^2) in SI units or lb/ft^2 in the U.S. Customary system.

Loading Along a Single Axis. The most common type of distributed loading encountered in engineering practice can be represented along a single axis.* For example, consider the beam (or plate) in Fig. 4–48*a* that has a constant width and is subjected to a pressure loading that varies only along the x axis. This loading can be described by the function $p = p(x)\ N/m^2$. It contains only one variable x, and for this reason, we can also represent it as a *coplanar distributed load*. To do so, we multiply the loading function by the width b m of the beam, so that $w(x) = p(x)b\ N/m$, Fig. 4–48*b*. Using the methods of Sec. 4.8, we can replace this coplanar parallel force system with a single equivalent resultant force $\mathbf{F}_R$ acting at a specific location on the beam, Fig. 4–48*c*.

Magnitude of Resultant Force. From Eq. 4–17 ($F_R = \Sigma F$), the magnitude of $\mathbf{F}_R$ is equivalent to the sum of all the forces in the system. In this case integration must be used since there is an infinite number of parallel forces $d\mathbf{F}$ acting on the beam, Fig. 4–48*b*. Since $d\mathbf{F}$ is acting on an element of length dx, and $w(x)$ is a force per unit length, then $dF = w(x)\,dx = dA$. In other words, the magnitude of $d\mathbf{F}$ is determined from the colored differential *area* dA under the loading curve. For the entire length L,

$$+\downarrow F_R = \Sigma F; \qquad \boxed{F_R = \int_L w(x)\,dx = \int_A dA = A} \qquad (4\text{–}19)$$

Therefore, the magnitude of the resultant force is equal to the area A under the loading diagram, Fig. 4–48*c*.

*The more general case of a surface loading acting on a body is considered in Sec. 9.5.

Location of Resultant Force. Applying Eq. 4–17 ($M_{R_O} = \Sigma M_O$), the location $\bar{x}$ of the line of action of $\mathbf{F}_R$ can be determined by equating the moments of the force resultant and the parallel force distribution about point O (the y axis). Since $d\mathbf{F}$ produces a moment of $x\,dF = xw(x)\,dx$ about O, Fig. 4–48*b*, then for the entire length, Fig. 4–48*c*,

$$\circlearrowleft + (M_R)_O = \Sigma M_O; \qquad -\bar{x}F_R = -\int_L xw(x)\,dx$$

Solving for $\bar{x}$, using Eq. 4–19, we have

$$\bar{x} = \frac{\int_L xw(x)\,dx}{\int_L w(x)\,dx} = \frac{\int_A x\,dA}{\int_A dA} \tag{4–20}$$

This coordinate $\bar{x}$, locates the geometric center or ***centroid*** of the *area* under the distributed loading. *In other words, the resultant force has a line of action which passes through the centroid C (geometric center) of the area under the loading diagram*, Fig. 4–48*c*. Detailed treatment of the integration techniques for finding the location of the centroid for areas is given in Chapter 9. In many cases, however, the distributed-loading diagram is in the shape of a rectangle, triangle, or some other simple geometric form. The centroid location for such common shapes does not have to be determined from the above equation but can be obtained directly from the tabulation given on the inside back cover.

Once $\bar{x}$ is determined, $\mathbf{F}_R$ by symmetry passes through point $(\bar{x}, 0)$ on the surface of the beam, Fig. 4–48*a*. *Therefore, in this case the resultant force has a magnitude equal to the volume under the loading curve $p = p(x)$ and a line of action which passes through the centroid (geometric center) of this volume.*

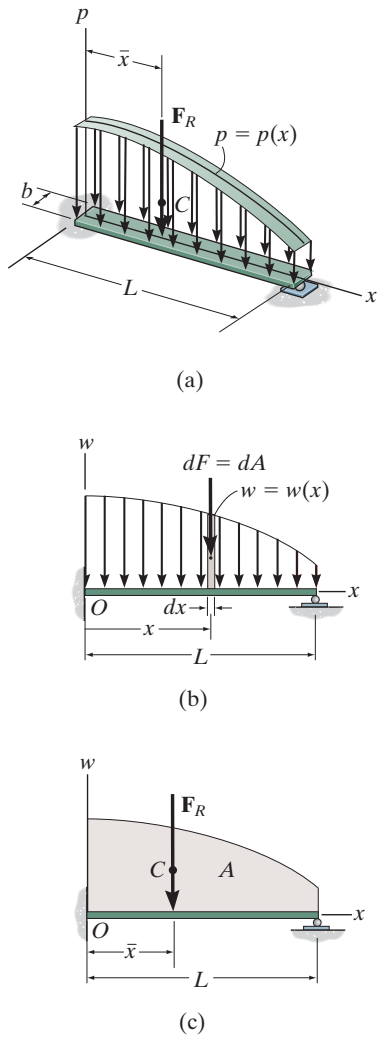

Fig. 4–48 (Repeated)

Important Points

- Coplanar distributed loadings are defined by using a loading function $w = w(x)$ that indicates the intensity of the loading along the length of a member. This intensity is measured in N/m or lb/ft.
- The external effects caused by a coplanar distributed load acting on a body can be represented by a single resultant force.
- This resultant force is equivalent to the *area* under the loading diagram, and has a line of action that passes through the *centroid* or geometric center of this area.

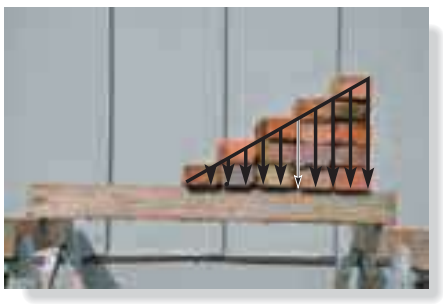

The pile of brick creates an approximate triangular distributed loading on the board. (© Russell C. Hibbeler)

EXAMPLE 4.21

Determine the magnitude and location of the equivalent resultant force acting on the shaft in Fig. 4–49*a*.

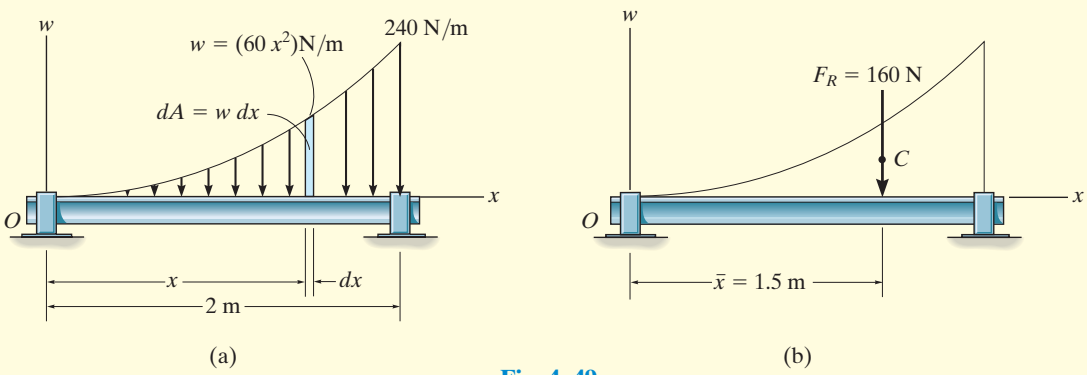

Fig. 4–49

SOLUTION

Since $w = w(x)$ is given, this problem will be solved by integration.

The differential element has an area $dA = w\,dx = 60x^2\,dx$. Applying Eq. 4–19,

$$+\downarrow F_R = \Sigma F;$$

$$F_R = \int_A dA = \int_0^{2\text{ m}} 60x^2\,dx = 60\left(\frac{x^3}{3}\right)\Bigg|_0^{2\text{ m}} = 60\left(\frac{2^3}{3} - \frac{0^3}{3}\right)$$

$$= 160\text{ N} \qquad \textit{Ans.}$$

The location $\bar{x}$ of $\mathbf{F}_R$ measured from O, Fig. 4–49*b*, is determined from Eq. 4–20.

$$\bar{x} = \frac{\int_A x\,dA}{\int_A dA} = \frac{\int_0^{2\text{ m}} x(60x^2)\,dx}{160\text{ N}} = \frac{60\left(\frac{x^4}{4}\right)\Big|_0^{2\text{ m}}}{160\text{ N}} = \frac{60\left(\frac{2^4}{4} - \frac{0^4}{4}\right)}{160\text{ N}}$$

$$= 1.5\text{ m} \qquad \textit{Ans.}$$

NOTE: These results can be checked by using the table on the inside back cover, where it is shown that the formula for an exparabolic area of length a, height b, and shape shown in Fig. 4–49*a*, is

$$A = \frac{ab}{3} = \frac{2\text{ m}(240\text{ N/m})}{3} = 160\text{ N and } \bar{x} = \frac{3}{4}a = \frac{3}{4}(2\text{ m}) = 1.5\text{ m}$$

EXAMPLE 4.22

A distributed loading of $p = (800x)$ Pa acts over the top surface of the beam shown in Fig. 4–50*a*. Determine the magnitude and location of the equivalent resultant force.

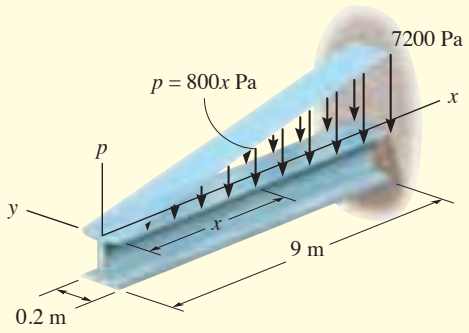

(a)

SOLUTION

Since the loading intensity is uniform along the width of the beam (the y axis), the loading can be viewed in two dimensions as shown in Fig. 4–50*b*. Here

$$w = (800x \text{ N/m}^2)(0.2 \text{ m})$$
$$= (160x) \text{ N/m}$$

At $x = 9$ m, note that $w = 1440$ N/m. Although we may again apply Eqs. 4–19 and 4–20 as in the previous example, it is simpler to use the table on the inside back cover.

The magnitude of the resultant force is equivalent to the area of the triangle.

$$F_R = \tfrac{1}{2}(9 \text{ m})(1440 \text{ N/m}) = 6480 \text{ N} = 6.48 \text{ kN} \qquad \textit{Ans.}$$

The line of action of $\mathbf{F}_R$ passes through the *centroid* C of this triangle. Hence,

$$\bar{x} = 9 \text{ m} - \tfrac{1}{3}(9 \text{ m}) = 6 \text{ m} \qquad \textit{Ans.}$$

The results are shown in Fig. 4–50*c*.

NOTE: We may also view the resultant $\mathbf{F}_R$ as *acting* through the *centroid* of the *volume* of the loading diagram $p = p(x)$ in Fig. 4–50*a*. Hence $\mathbf{F}_R$ intersects the x–y plane at the point (6 m, 0). Furthermore, the magnitude of $\mathbf{F}_R$ is equal to the volume under the loading diagram; i.e.,

$$F_R = V = \tfrac{1}{2}(7200 \text{ N/m}^2)(9 \text{ m})(0.2 \text{ m}) = 6.48 \text{ kN} \qquad \textit{Ans.}$$

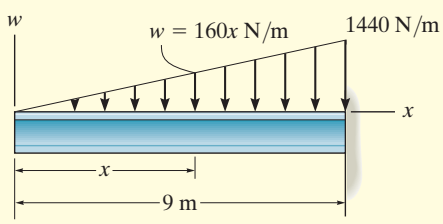

(b)

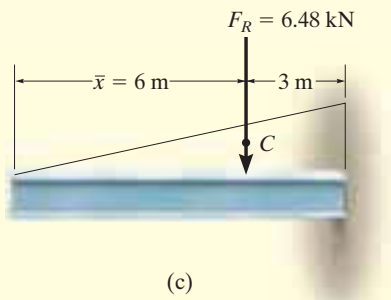

(c)

Fig. 4–50

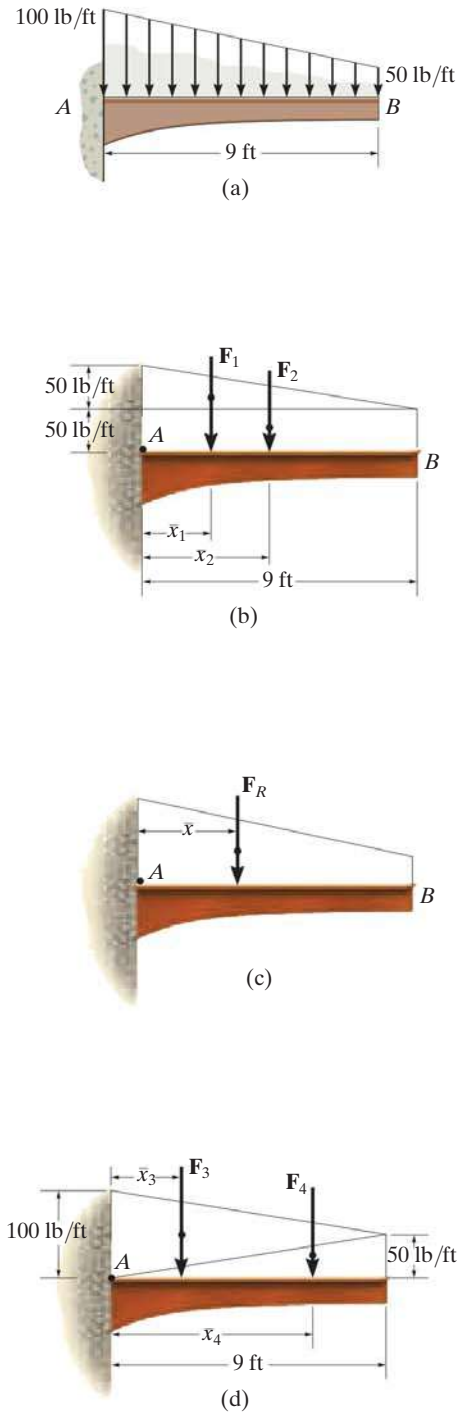

Fig. 4–51

The granular material exerts the distributed loading on the beam as shown in Fig. 4–51*a*. Determine the magnitude and location of the equivalent resultant of this load.

SOLUTION

The area of the loading diagram is a *trapezoid*, and therefore the solution can be obtained directly from the area and centroid formulas for a trapezoid listed on the inside back cover. Since these formulas are not easily remembered, instead we will solve this problem by using "composite" areas. Here we will divide the trapezoidal loading into a rectangular and triangular loading as shown in Fig. 4–51*b*. The magnitude of the force represented by each of these loadings is equal to its associated *area*,

$$F_1 = \tfrac{1}{2}(9\text{ ft})(50\text{ lb/ft}) = 225\text{ lb}$$

$$F_2 = (9\text{ ft})(50\text{ lb/ft}) = 450\text{ lb}$$

The lines of action of these parallel forces act through the respective *centroids* of their associated areas and therefore intersect the beam at

$$\bar{x}_1 = \tfrac{1}{3}(9\text{ ft}) = 3\text{ ft}$$

$$\bar{x}_2 = \tfrac{1}{2}(9\text{ ft}) = 4.5\text{ ft}$$

The two parallel forces $\mathbf{F}_1$ and $\mathbf{F}_2$ can be reduced to a single resultant $\mathbf{F}_R$. The magnitude of $\mathbf{F}_R$ is

$$+\downarrow F_R = \Sigma F; \qquad F_R = 225 + 450 = 675\text{ lb} \qquad \textit{Ans.}$$

We can find the location of $\mathbf{F}_R$ with reference to point A, Figs. 4–51*b* and 4–51*c*. We require

$$\circlearrowleft + (M_R)_A = \Sigma M_A; \quad \bar{x}(675) = 3(225) + 4.5(450)$$

$$\bar{x} = 4\text{ ft} \qquad \textit{Ans.}$$

NOTE: The trapezoidal area in Fig. 4–51*a* can also be divided into two triangular areas as shown in Fig. 4–51*d*. In this case

$$F_3 = \tfrac{1}{2}(9\text{ ft})(100\text{ lb/ft}) = 450\text{ lb}$$

$$F_4 = \tfrac{1}{2}(9\text{ ft})(50\text{ lb/ft}) = 225\text{ lb}$$

and

$$\bar{x}_3 = \tfrac{1}{3}(9\text{ ft}) = 3\text{ ft}$$

$$\bar{x}_4 = 9\text{ ft} - \tfrac{1}{3}(9\text{ ft}) = 6\text{ ft}$$

Using these results, show that again $F_R = 675$ lb and $\bar{x} = 4$ ft.

FUNDAMENTAL PROBLEMS

F4–37. Determine the resultant force and specify where it acts on the beam measured from A.

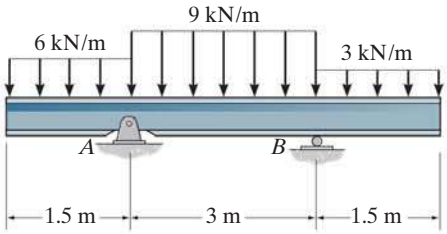

Prob. F4–37

F4–38. Determine the resultant force and specify where it acts on the beam measured from A.

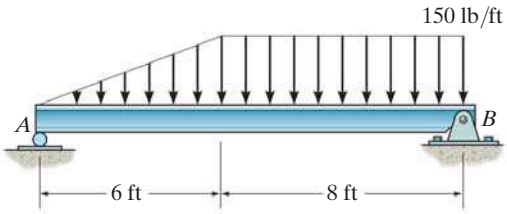

Prob. F4–38

F4–39. Determine the resultant force and specify where it acts on the beam measured from A.

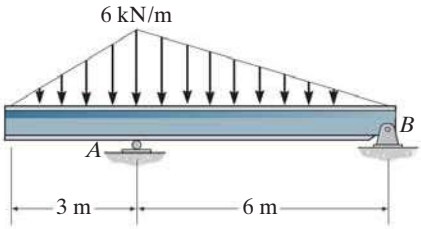

Prob. F4–39

F4–40. Determine the resultant force and specify where it acts on the beam measured from A.

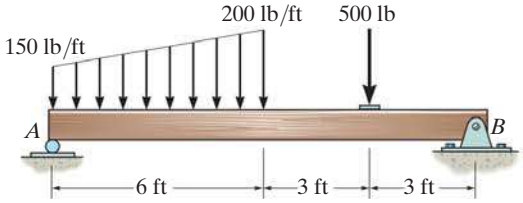

Prob. F4–40

F4–41. Determine the resultant force and specify where it acts on the beam measured from A.

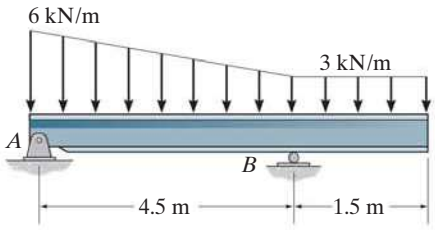

Prob. F4–41

F4–42. Determine the resultant force and specify where it acts on the beam measured from A.

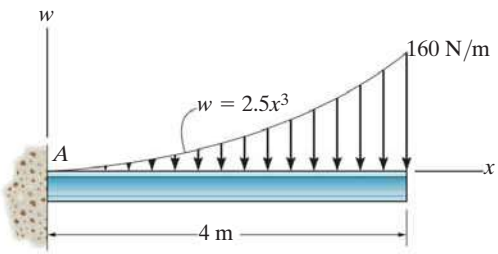

Prob. F4–42

FUNDAMENTAL PROBLEMS

4–138. Replace the loading by an equivalent resultant force and couple moment acting at point O.

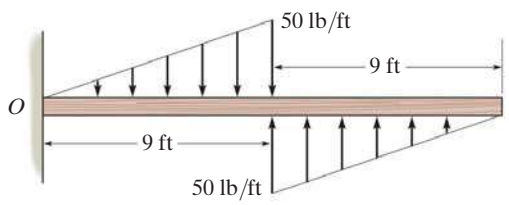

Prob. 4–138

4–139. Replace the distributed loading with an equivalent resultant force, and specify its location on the beam measured from point O.

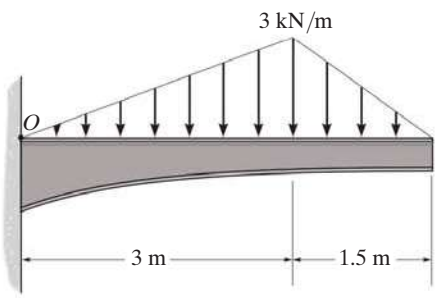

Prob. 4–139

***4–140.** Replace the loading by an equivalent resultant force and specify its location on the beam, measured from point A.

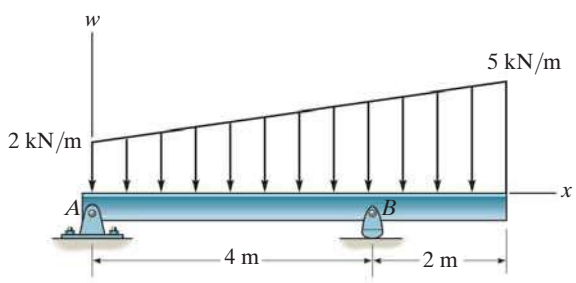

Prob. 4–140

4–141. Currently eighty-five percent of all neck injuries are caused by rear-end car collisions. To alleviate this problem, an automobile seat restraint has been developed that provides additional pressure contact with the cranium. During dynamic tests the distribution of load on the cranium has been plotted and shown to be parabolic. Determine the equivalent resultant force and its location, measured from point A.

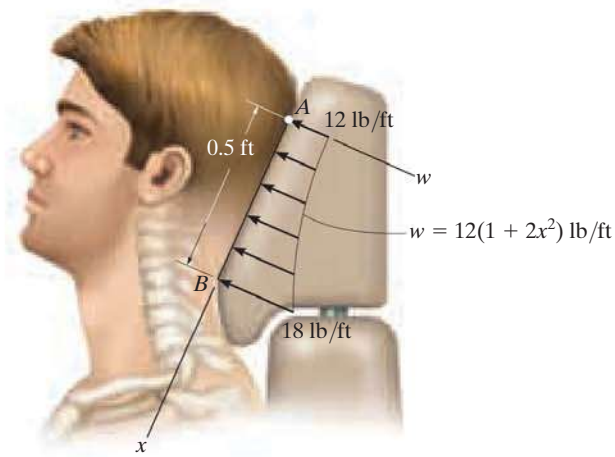

Prob. 4–141

4–142. Replace the distributed loading by an equivalent resultant force, and specify its location on the beam, measured from the pin at A.

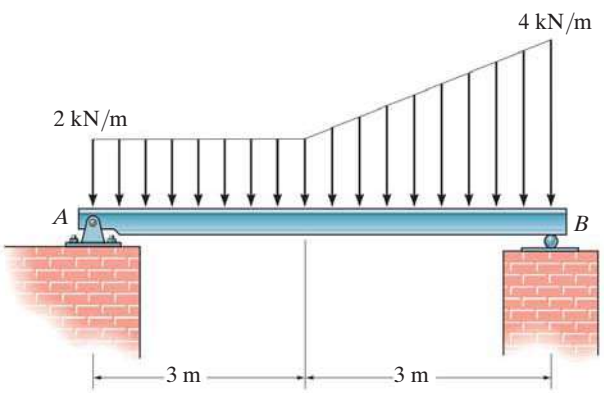

Prob. 4–142

4–143. Replace this loading by an equivalent resultant force and specify its location, measured from point O.

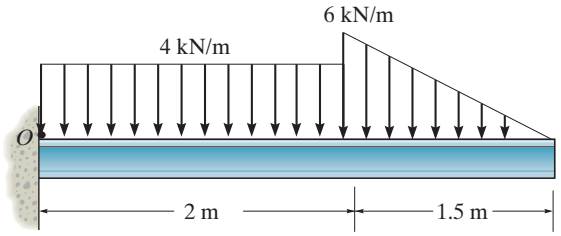

Prob. 4–143

***4–144.** The distribution of soil loading on the bottom of a building slab is shown. Replace this loading by an equivalent resultant force and specify its location, measured from point O.

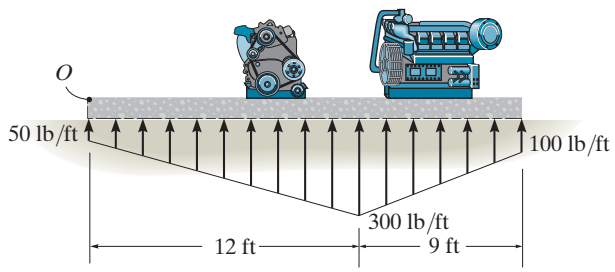

Prob. 4–144

4–145. Replace the loading by an equivalent resultant force and couple moment acting at point O.

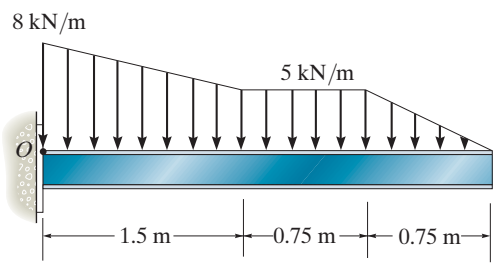

Prob. 4–145

4–146. Replace the distributed loading by an equivalent resultant force and couple moment acting at point A.

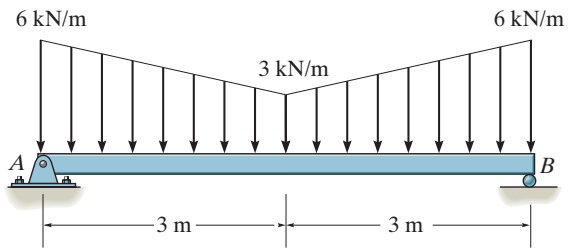

Prob. 4–146

4–147. Determine the length b of the triangular load and its position a on the beam such that the equivalent resultant force is zero and the resultant couple moment is 8 kN · m clockwise.

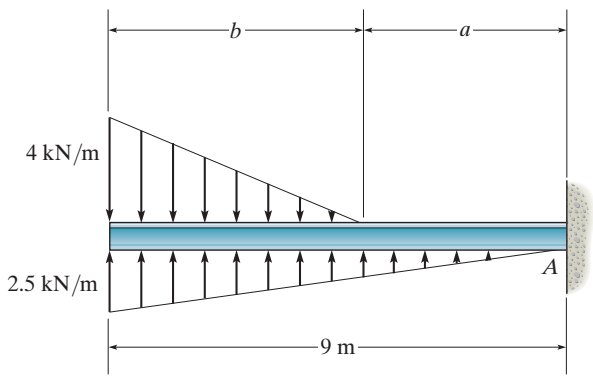

Prob. 4–147

***4–148.** The form is used to cast a concrete wall having a width of 5 m. Determine the equivalent resultant force the wet concrete exerts on the form AB if the pressure distribution due to the concrete can be approximated as shown. Specify the location of the resultant force, measured from point B.

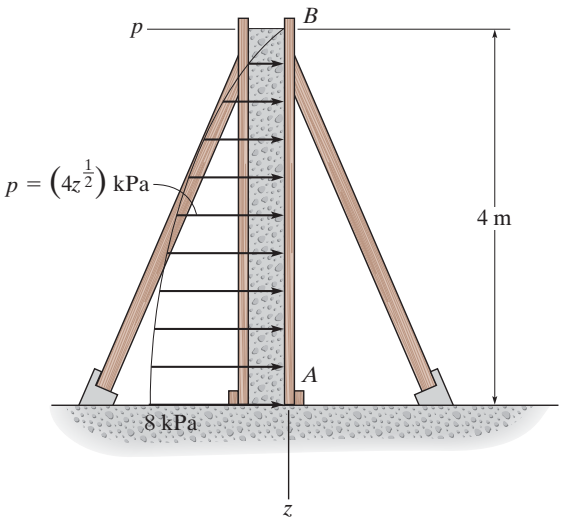

Prob. 4–148

4–149. If the soil exerts a trapezoidal distribution of load on the bottom of the footing, determine the intensities w_1 and w_2 of this distribution needed to support the column loadings.

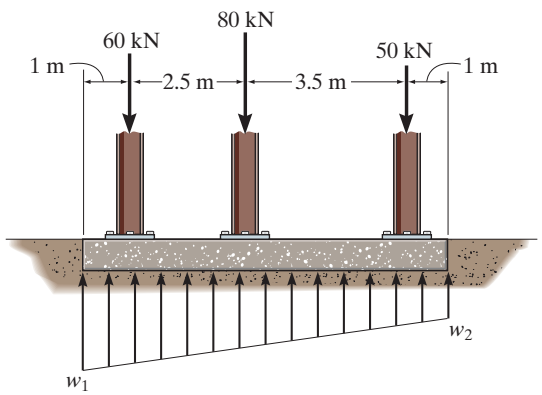

Prob. 4–149

4–150. Replace the loading by an equivalent force and couple moment acting at point O.

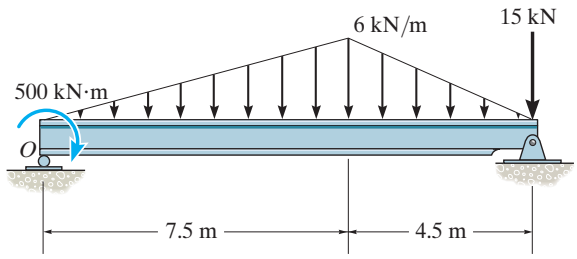

Prob. 4–150

4–151. Replace the loading by a single resultant force, and specify the location of the force measured from point O.

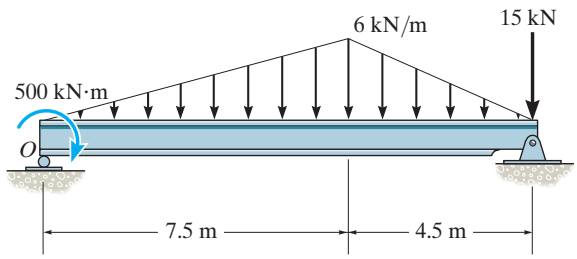

Prob. 4–151

***4–152.** Replace the loading by an equivalent resultant force and couple moment acting at point A.

4–153. Replace the loading by a single resultant force, and specify its location on the beam measured from point A.

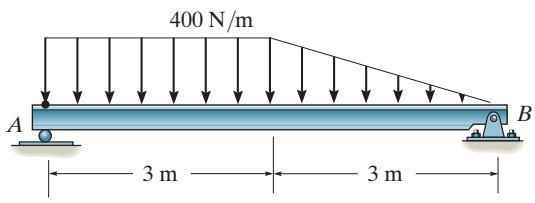

Probs. 4–152/153

4–154. Replace the distributed loading by an equivalent resultant force and specify where its line of action intersects a horizontal line along member AB, measured from A.

4–155. Replace the distributed loading by an equivalent resultant force and specify where its line of action intersects a vertical line along member BC, measured from C.

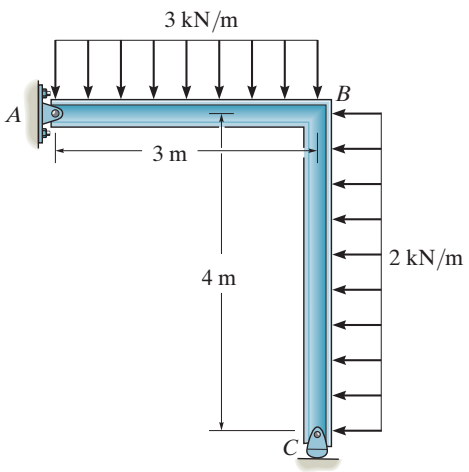

Probs. 4–154/155

***4–156.** Determine the length b of the triangular load and its position a on the beam such that the equivalent resultant force is zero and the resultant couple moment is 8 kN · m clockwise.

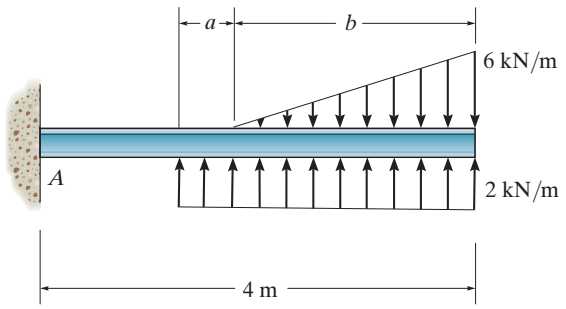

Prob. 4–156

4–157. Determine the equivalent resultant force and couple moment at point O.

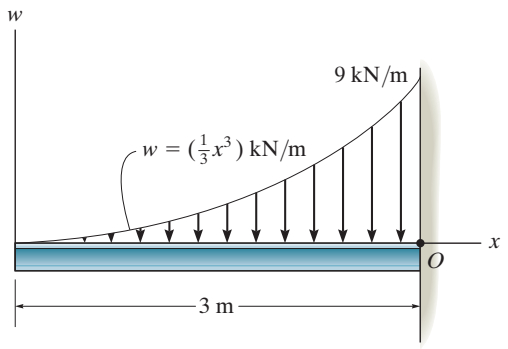

Prob. 4–157

4–158. Determine the magnitude of the equivalent resultant force and its location, measured from point O.

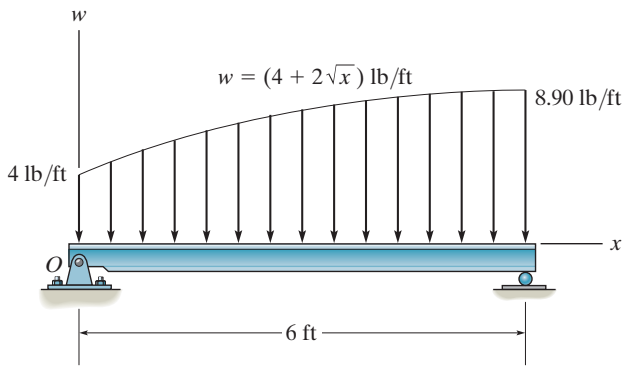

Prob. 4–158

4–159. The distributed load acts on the shaft as shown. Determine the magnitude of the equivalent resultant force and specify its location, measured from the support, A.

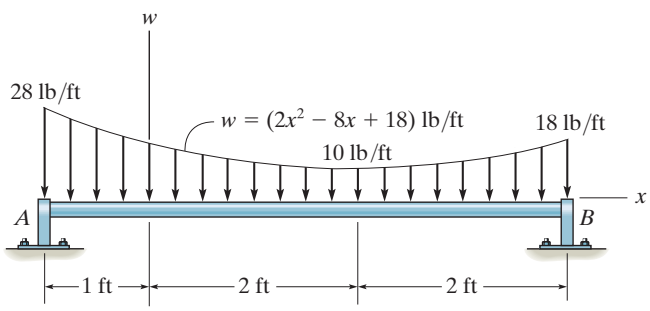

Prob. 4–159

***4–160.** Replace the distributed loading with an equivalent resultant force, and specify its location on the beam measured from point A.

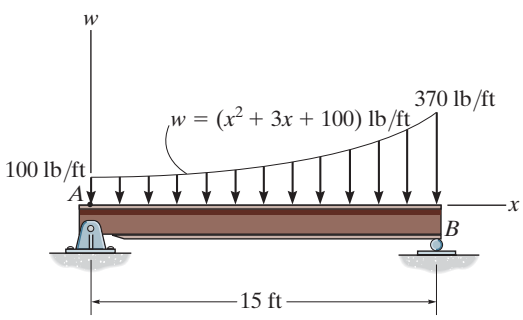

Prob. 4–160

4–161. Replace the loading by an equivalent resultant force and couple moment acting at point O.

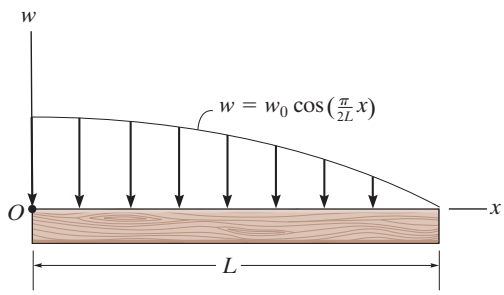

Prob. 4–161

4–162. Wet concrete exerts a pressure distribution along the wall of the form. Determine the resultant force of this distribution and specify the height h where the bracing strut should be placed so that it lies through the line of action of the resultant force. The wall has a width of 5 m.

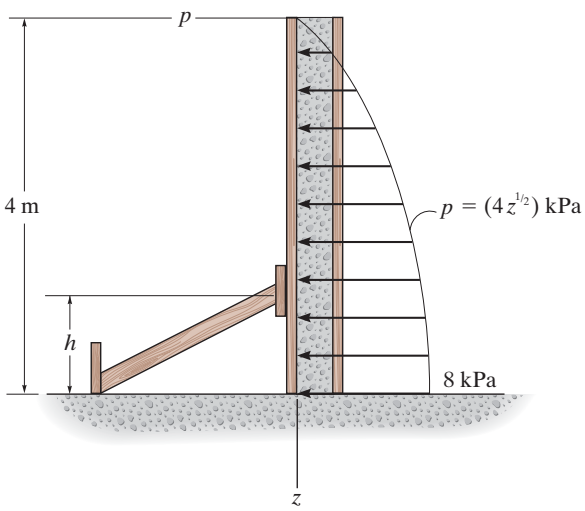

Prob. 4–162

CHAPTER REVIEW

Moment of Force—Scalar Definition

A force produces a turning effect or moment about a point O that does not lie on its line of action. In scalar form, the moment *magnitude* is the product of the force and the moment arm or perpendicular distance from point O to the line of action of the force.

$$M_O = Fd$$

The *direction* of the moment is defined using the right-hand rule. $\mathbf{M}_O$ always acts along an axis perpendicular to the plane containing $\mathbf{F}$ and d, and passes through the point O.

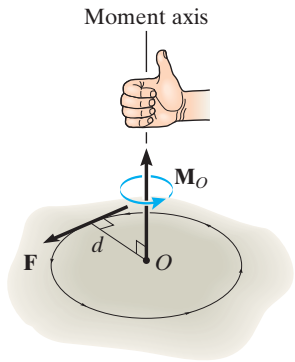

Rather than finding d, it is normally easier to resolve the force into its x and y components, determine the moment of each component about the point, and then sum the results. This is called the principle of moments.

$$M_O = Fd = F_x y - F_y x$$

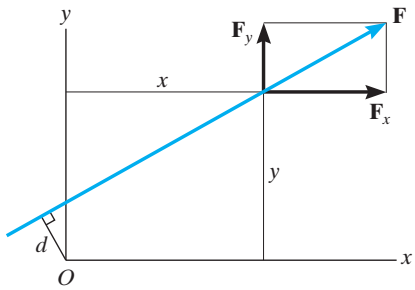

Moment of a Force—Vector Definition

Since three-dimensional geometry is generally more difficult to visualize, the vector cross product should be used to determine the moment. Here $\mathbf{M}_O = \mathbf{r} \times \mathbf{F}$, where $\mathbf{r}$ is a position vector that extends from point O to any point A, B, *or* C on the line of action of $\mathbf{F}$.

$$\mathbf{M}_O = \mathbf{r}_A \times \mathbf{F} = \mathbf{r}_B \times \mathbf{F} = \mathbf{r}_C \times \mathbf{F}$$

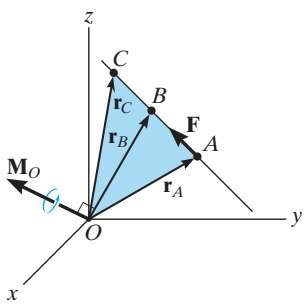

If the position vector $\mathbf{r}$ and force $\mathbf{F}$ are expressed as Cartesian vectors, then the cross product results from the expansion of a determinant.

$$\mathbf{M}_O = \mathbf{r} \times \mathbf{F} = \begin{vmatrix} \mathbf{i} & \mathbf{j} & \mathbf{k} \\ r_x & r_y & r_z \\ F_x & F_y & F_z \end{vmatrix}$$

Moment about an Axis If the moment of a force **F** is to be determined about an arbitrary axis a, then for a scalar solution the moment arm, or shortest distance d_a from the line of action of the force to the axis must be used. This distance is perpendicular to both the axis and the force line of action.	$M_a = Fd_a$	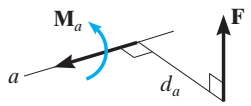
Note that when the line of action of **F** intersects the axis, then the moment of **F** about the axis is zero. Also, when the line of action of **F** is parallel to the axis, the moment of **F** about the axis is zero.		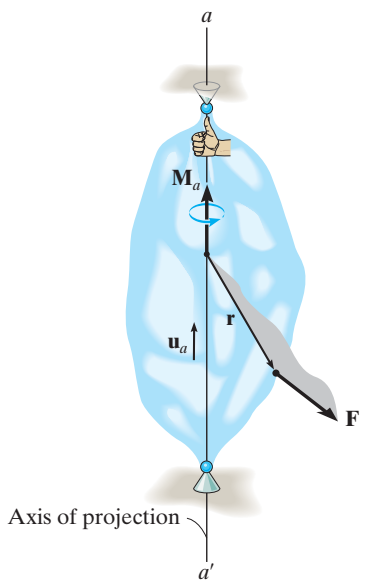
In three dimensions, the scalar triple product should be used. Here $\mathbf{u}_a$ is the unit vector that specifies the direction of the axis, and **r** is a position vector that is directed from any point on the axis to any point on the line of action of the force. If M_a is calculated as a negative scalar, then the sense of direction of $\mathbf{M}_a$ is opposite to $\mathbf{u}_a$.	$M_a = \mathbf{u}_a \cdot (\mathbf{r} \times \mathbf{F}) = \begin{vmatrix} u_{a_x} & u_{a_y} & u_{a_z} \\ r_x & r_y & r_z \\ F_x & F_y & F_z \end{vmatrix}$	
Couple Moment A couple consists of two equal but opposite forces that act a perpendicular distance d apart. Couples tend to produce a rotation without translation.		
The magnitude of the couple moment is $M = Fd$, and its direction is established using the right-hand rule.	$M = Fd$	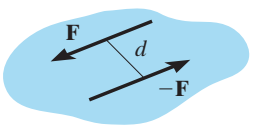
If the vector cross product is used to determine the moment of a couple, then **r** extends from any point on the line of action of one of the forces to any point on the line of action of the other force **F** that is used in the cross product.	$\mathbf{M} = \mathbf{r} \times \mathbf{F}$	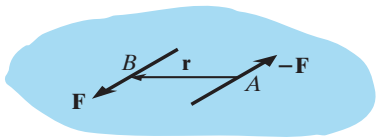

Simplification of a Force and Couple System

Any system of forces and couples can be reduced to a single resultant force and resultant couple moment acting at a point. The resultant force is the sum of all the forces in the system, $\mathbf{F}_R = \Sigma\mathbf{F}$, and the resultant couple moment is equal to the sum of all the moments of the forces about the point and couple moments. $\mathbf{M}_{R_O} = \Sigma\mathbf{M}_O + \Sigma\mathbf{M}$.

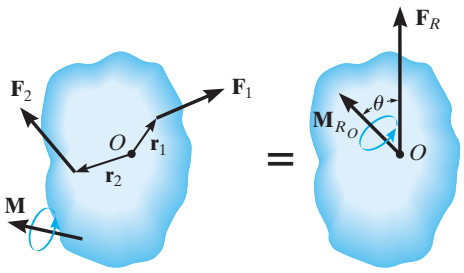

Further simplification to a single resultant force is possible provided the force system is concurrent, coplanar, or parallel. To find the location of the resultant force from a point, it is necessary to equate the moment of the resultant force about the point to the moment of the forces and couples in the system about the same point.

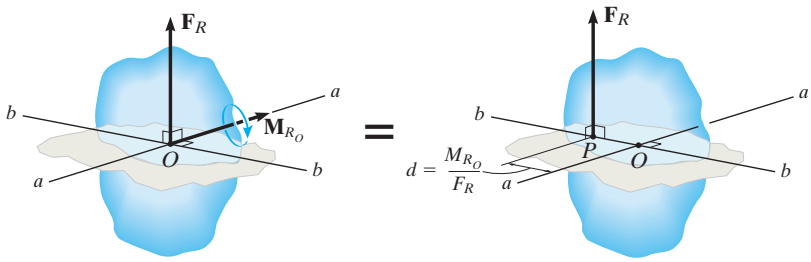

If the resultant force and couple moment at a point are not perpendicular to one another, then this system can be reduced to a wrench, which consists of the resultant force and collinear couple moment.

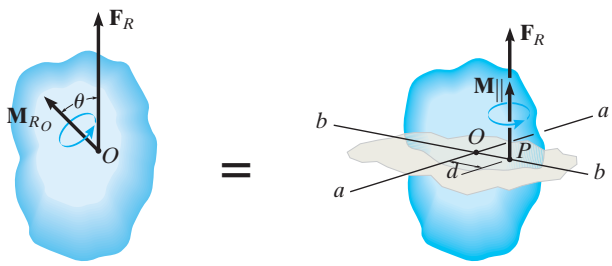

Coplanar Distributed Loading

A simple distributed loading can be represented by its resultant force, which is equivalent to the *area* under the loading curve. This resultant has a line of action that passes through the *centroid* or geometric center of the area or volume under the loading diagram.

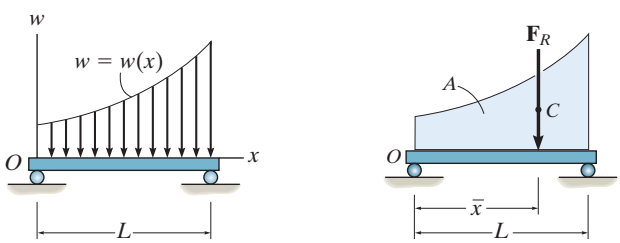

4.6 Moment of a Couple

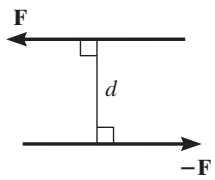

Fig. 4–25

A ***couple*** is defined as two parallel forces that have the same magnitude, but opposite directions, and are separated by a perpendicular distance d, Fig. 4–25. Since the resultant force is zero, the only effect of a couple is to produce an actual rotation, or if no movement is possible, there is a tendency of rotation in a specified direction. For example, imagine that you are driving a car with both hands on the steering wheel and you are making a turn. One hand will push up on the wheel while the other hand pulls down, which causes the steering wheel to rotate.

The moment produced by a couple is called a ***couple moment***. We can determine its value by finding the sum of the moments of both couple forces about *any* arbitrary point. For example, in Fig. 4–26, position vectors $\mathbf{r}_A$ and $\mathbf{r}_B$ are directed from point O to points A and B lying on the line of action of $-\mathbf{F}$ and $\mathbf{F}$. The couple moment determined about O is therefore

$$\mathbf{M} = \mathbf{r}_B \times \mathbf{F} + \mathbf{r}_A \times -\mathbf{F} = (\mathbf{r}_B - \mathbf{r}_A) \times \mathbf{F}$$

However $\mathbf{r}_B = \mathbf{r}_A + \mathbf{r}$ or $\mathbf{r} = \mathbf{r}_B - \mathbf{r}_A$, so that

$$\mathbf{M} = \mathbf{r} \times \mathbf{F} \tag{4–13}$$

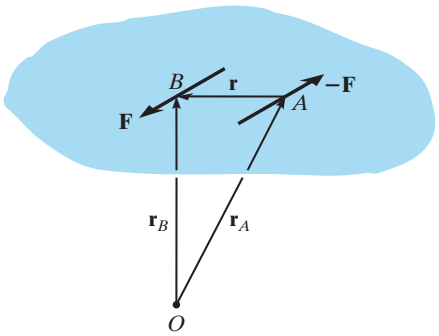

Fig. 4–26

This result indicates that a couple moment is a ***free vector***, i.e., it can act at *any point* since $\mathbf{M}$ depends *only* upon the position vector $\mathbf{r}$ directed *between* the forces and *not* the position vectors $\mathbf{r}_A$ and $\mathbf{r}_B$, directed from the arbitrary point O to the forces. This concept is unlike the moment of a force, which requires a definite point (or axis) about which moments are determined.

Scalar Formulation. The moment of a couple, $\mathbf{M}$, Fig. 4–27, is defined as having a *magnitude* of

$$\boxed{M = Fd} \tag{4–14}$$

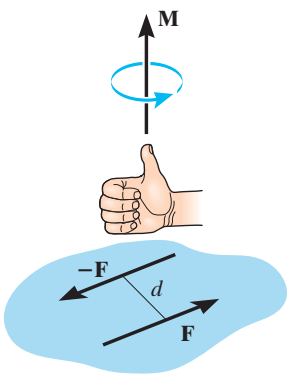

Fig. 4–27

where F is the magnitude of one of the forces and d is the perpendicular distance or moment arm between the forces. The *direction* and sense of the couple moment are determined by the right-hand rule, where the thumb indicates this direction when the fingers are curled with the sense of rotation caused by the couple forces. In all cases, $\mathbf{M}$ will act perpendicular to the plane containing these forces.

Vector Formulation. The moment of a couple can also be expressed by the vector cross product using Eq. 4–13, i.e.,

$$\boxed{\mathbf{M} = \mathbf{r} \times \mathbf{F}} \tag{4–15}$$

Application of this equation is easily remembered if one thinks of taking the moments of both forces about a point lying on the line of action of one of the forces. For example, if moments are taken about point A in Fig. 4–26, the moment of $-\mathbf{F}$ is *zero* about this point, and the moment of $\mathbf{F}$ is defined from Eq. 4–15. Therefore, in the formulation $\mathbf{r}$ is crossed with the force $\mathbf{F}$ to which it is directed.

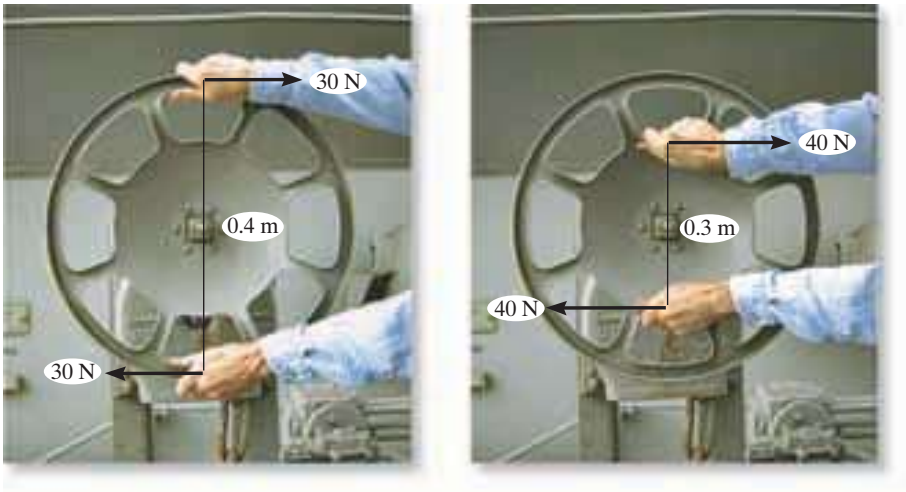

Fig. 4–28 (© Russell C. Hibbeler)

Equivalent Couples. If two couples produce a moment with the *same magnitude and direction*, then these two couples are *equivalent*. For example, the two couples shown in Fig. 4–28 are *equivalent* because each couple moment has a magnitude of $M = 30\text{ N}(0.4\text{ m}) = 40\text{ N}(0.3\text{ m}) = 12\text{ N}\cdot\text{m}$, and each is directed into the plane of the page. Notice that larger forces are required in the second case to create the same turning effect because the hands are placed closer together. Also, if the wheel was connected to the shaft at a point other than at its center, then the wheel would still turn when each couple is applied since the $12\text{ N}\cdot\text{m}$ couple is a free vector.

Resultant Couple Moment. Since couple moments are vectors, their resultant can be determined by vector addition. For example, consider the couple moments $\mathbf{M}_1$ and $\mathbf{M}_2$ acting on the pipe in Fig. 4–29*a*. Since each couple moment is a free vector, we can join their tails at any arbitrary point and find the resultant couple moment, $\mathbf{M}_R = \mathbf{M}_1 + \mathbf{M}_2$ as shown in Fig. 4–29*b*.

If more than two couple moments act on the body, we may generalize this concept and write the vector resultant as

$$\mathbf{M}_R = \Sigma(\mathbf{r} \times \mathbf{F}) \tag{4–16}$$

These concepts are illustrated numerically in the examples that follow. In general, problems projected in two dimensions should be solved using a scalar analysis since the moment arms and force components are easy to determine.

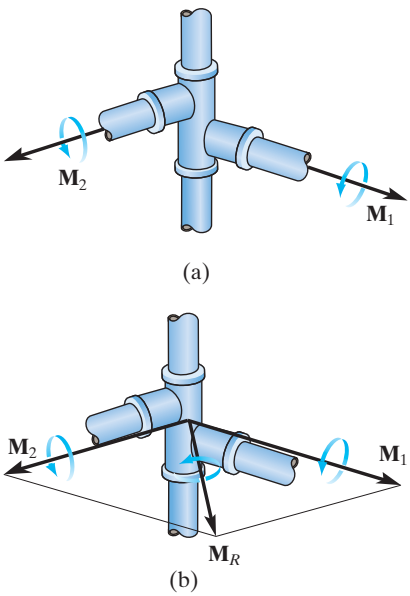

Fig. 4–29

Steering wheels on vehicles have been made smaller than on older vehicles because power steering does not require the driver to apply a large couple moment to the rim of the wheel. (© Russell C. Hibbeler)

Important Points

- A couple moment is produced by two noncollinear forces that are equal in magnitude but opposite in direction. Its effect is to produce pure rotation, or tendency for rotation in a specified direction.
- A couple moment is a free vector, and as a result it causes the same rotational effect on a body regardless of where the couple moment is applied to the body.
- The moment of the two couple forces can be determined about *any point*. For convenience, this point is often chosen on the line of action of one of the forces in order to eliminate the moment of this force about the point.
- In three dimensions the couple moment is often determined using the vector formulation, $\mathbf{M} = \mathbf{r} \times \mathbf{F}$, where $\mathbf{r}$ is directed from *any point* on the line of action of one of the forces to *any point* on the line of action of the other force $\mathbf{F}$.
- A resultant couple moment is simply the vector sum of all the couple moments of the system.

EXAMPLE 4.10

Determine the resultant couple moment of the three couples acting on the plate in Fig. 4–30.

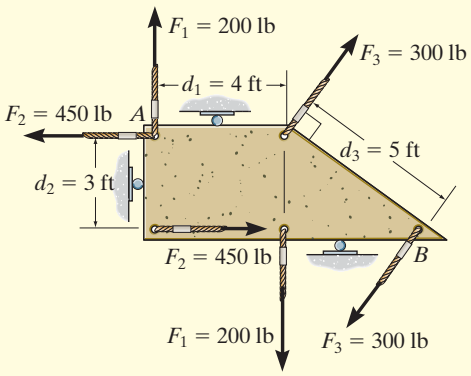

Fig. 4–30

SOLUTION

As shown the perpendicular distances between each pair of couple forces are $d_1 = 4$ ft, $d_2 = 3$ ft, and $d_3 = 5$ ft. Considering counterclockwise couple moments as positive, we have

$$\circlearrowleft + M_R = \Sigma M;\ M_R = -F_1 d_1 + F_2 d_2 - F_3 d_3$$

$$= -(200\text{ lb})(4\text{ ft}) + (450\text{ lb})(3\text{ ft}) - (300\text{ lb})(5\text{ ft})$$

$$= -950\text{ lb}\cdot\text{ft} = 950\text{ lb}\cdot\text{ft}\ \circlearrowright \qquad \textit{Ans.}$$

The negative sign indicates that $\mathbf{M}_R$ has a clockwise rotational sense.

EXAMPLE 4.11

Determine the magnitude and direction of the couple moment acting on the gear in Fig. 4–31*a*.

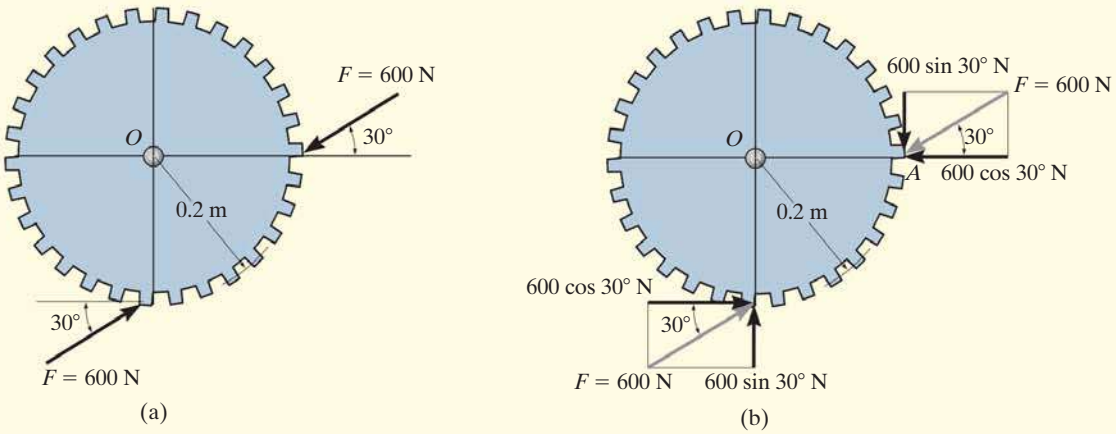

SOLUTION

The easiest solution requires resolving each force into its components as shown in Fig. 4–31*b*. The couple moment can be determined by summing the moments of these force components about any point, for example, the center O of the gear or point A. If we consider counterclockwise moments as positive, we have

$$\circlearrowleft + M = \Sigma M_O;\ M = (600 \cos 30^\circ \text{ N})(0.2 \text{ m}) - (600 \sin 30^\circ \text{ N})(0.2 \text{ m})$$
$$= 43.9 \text{ N} \cdot \text{m} \circlearrowleft \qquad \textit{Ans.}$$

or

$$\circlearrowleft + M = \Sigma M_A;\ M = (600 \cos 30^\circ \text{ N})(0.2 \text{ m}) - (600 \sin 30^\circ \text{ N})(0.2 \text{ m})$$
$$= 43.9 \text{ N} \cdot \text{m} \circlearrowleft \qquad \textit{Ans.}$$

This positive result indicates that **M** has a counterclockwise rotational sense, so it is directed outward, perpendicular to the page.

NOTE: The same result can also be obtained using $M = Fd$, where d is the perpendicular distance between the lines of action of the couple forces, Fig. 4–31*c*. However, the computation for d is more involved. Realize that the couple moment is a free vector and can act at any point on the gear and produce the same turning effect about point O.

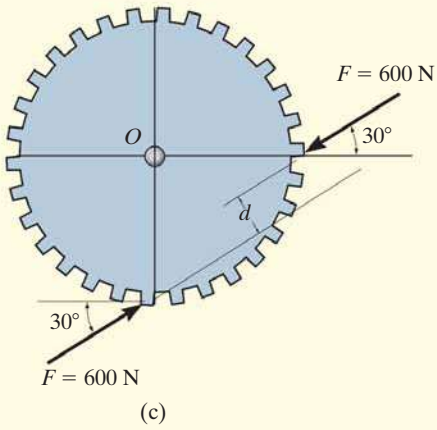

Fig. 4–31

Determine the couple moment acting on the pipe shown in Fig. 4–32*a*. Segment *AB* is directed 30° below the *x*–*y* plane.

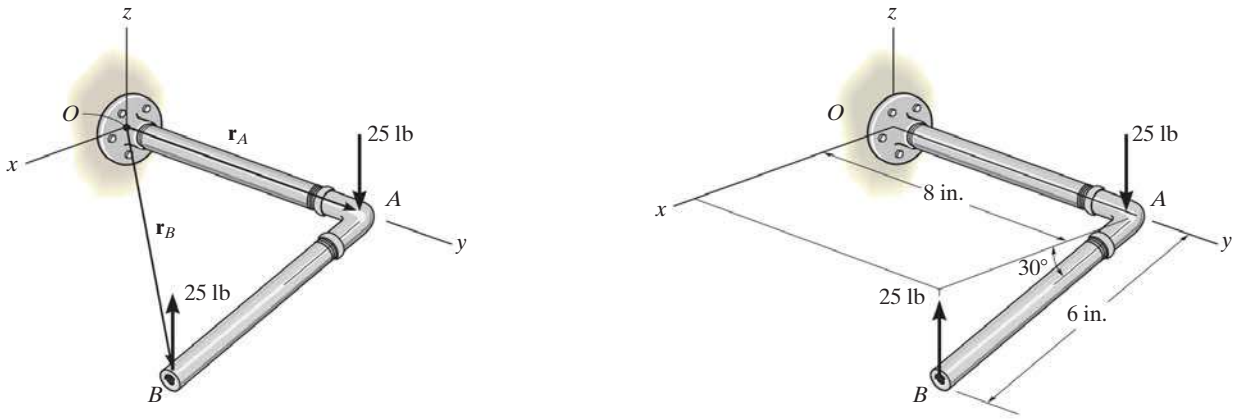

(a)

(b)

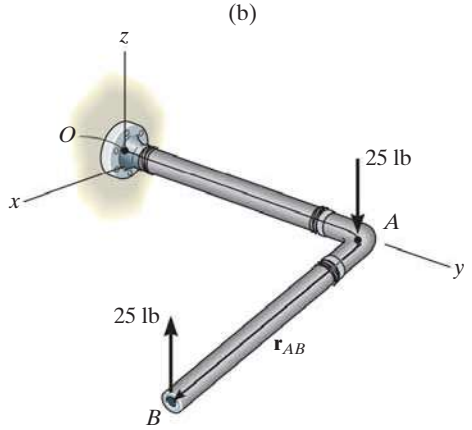

(c)

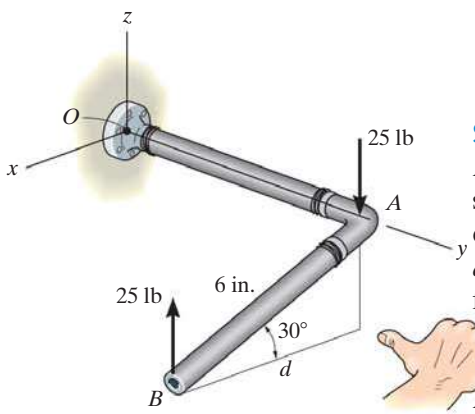

(d)

Fig. 4–32

SOLUTION I *(VECTOR ANALYSIS)*

The moment of the two couple forces can be found about *any point*. If point *O* is considered, Fig. 4–32*b*, we have

$$\begin{aligned}\mathbf{M} &= \mathbf{r}_A \times (-25\mathbf{k}) + \mathbf{r}_B \times (25\mathbf{k})\\ &= (8\mathbf{j}) \times (-25\mathbf{k}) + (6\cos 30°\mathbf{i} + 8\mathbf{j} - 6\sin 30°\mathbf{k}) \times (25\mathbf{k})\\ &= -200\mathbf{i} - 129.9\mathbf{j} + 200\mathbf{i}\\ &= \{-130\mathbf{j}\}\ \text{lb}\cdot\text{in.}\end{aligned}$$ *Ans.*

It is *easier* to take moments of the couple forces about a point lying on the line of action of one of the forces, e.g., point *A*, Fig. 4–32*c*. In this case the moment of the force at *A* is zero, so that

$$\begin{aligned}\mathbf{M} &= \mathbf{r}_{AB} \times (25\mathbf{k})\\ &= (6\cos 30°\mathbf{i} - 6\sin 30°\mathbf{k}) \times (25\mathbf{k})\\ &= \{-130\mathbf{j}\}\ \text{lb}\cdot\text{in.}\end{aligned}$$ *Ans.*

SOLUTION II *(SCALAR ANALYSIS)*

Although this problem is shown in three dimensions, the geometry is simple enough to use the scalar equation $M = Fd$. The perpendicular distance between the lines of action of the couple forces is $d = 6\cos 30° = 5.196$ in., Fig. 4–32*d*. Hence, taking moments of the forces about either point *A* or point *B* yields

$$M = Fd = 25\ \text{lb}\,(5.196\ \text{in.}) = 129.9\ \text{lb}\cdot\text{in.}$$

Applying the right-hand rule, **M** acts in the $-\mathbf{j}$ direction. Thus,

$$\mathbf{M} = \{-130\mathbf{j}\}\ \text{lb}\cdot\text{in.}$$ *Ans.*

EXAMPLE 4.13

Replace the two couples acting on the pipe column in Fig. 4–33*a* by a resultant couple moment.

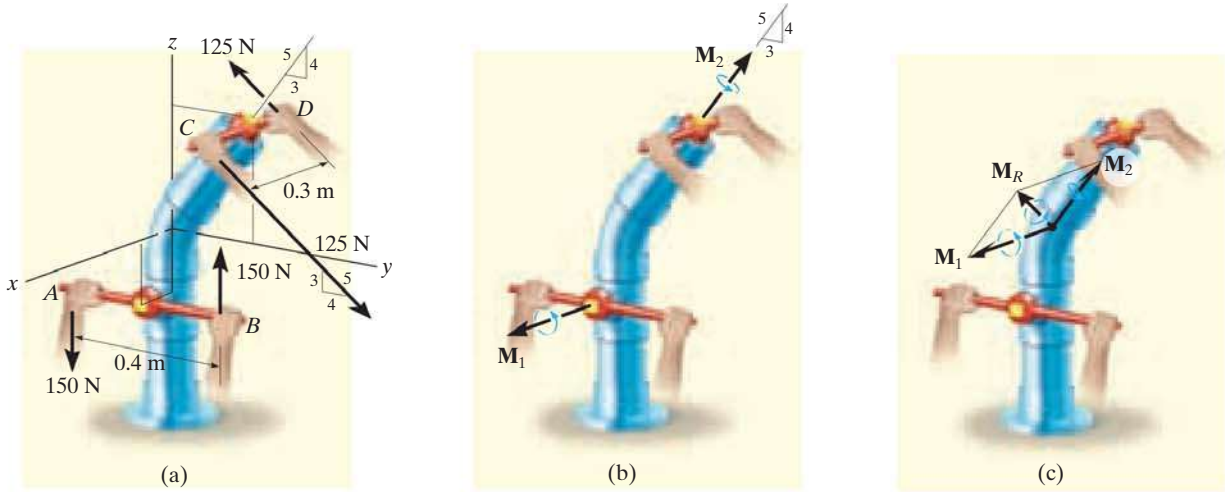

Fig. 4–33

SOLUTION *(VECTOR ANALYSIS)*

The couple moment $\mathbf{M}_1$, developed by the forces at A and B, can easily be determined from a scalar formulation.

$$M_1 = Fd = 150\text{ N}(0.4\text{ m}) = 60\text{ N}\cdot\text{m}$$

By the right-hand rule, $\mathbf{M}_1$ acts in the $+\mathbf{i}$ direction, Fig. 4–33*b*. Hence,

$$\mathbf{M}_1 = \{60\mathbf{i}\}\text{ N}\cdot\text{m}$$

Vector analysis will be used to determine $\mathbf{M}_2$, caused by forces at C and D. If moments are calculated about point D, Fig. 4–33*a*, $\mathbf{M}_2 = \mathbf{r}_{DC} \times \mathbf{F}_C$, then

$$\begin{aligned}\mathbf{M}_2 &= \mathbf{r}_{DC} \times \mathbf{F}_C = (0.3\mathbf{i}) \times \left[125\left(\tfrac{4}{5}\right)\mathbf{j} - 125\left(\tfrac{3}{5}\right)\mathbf{k}\right] \\ &= (0.3\mathbf{i}) \times [100\mathbf{j} - 75\mathbf{k}] = 30(\mathbf{i} \times \mathbf{j}) - 22.5(\mathbf{i} \times \mathbf{k}) \\ &= \{22.5\mathbf{j} + 30\mathbf{k}\}\text{ N}\cdot\text{m}\end{aligned}$$

Since $\mathbf{M}_1$ and $\mathbf{M}_2$ are free vectors, they may be moved to some arbitrary point and added vectorially, Fig. 4–33*c*. The resultant couple moment becomes

$$\mathbf{M}_R = \mathbf{M}_1 + \mathbf{M}_2 = \{60\mathbf{i} + 22.5\mathbf{j} + 30\mathbf{k}\}\text{ N}\cdot\text{m} \qquad \textit{Ans.}$$

FUNDAMENTAL PROBLEMS

F4–19. Determine the resultant couple moment acting on the beam.

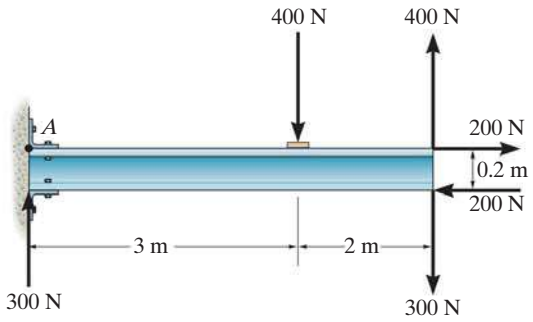

Prob. F4–19

F4–20. Determine the resultant couple moment acting on the triangular plate.

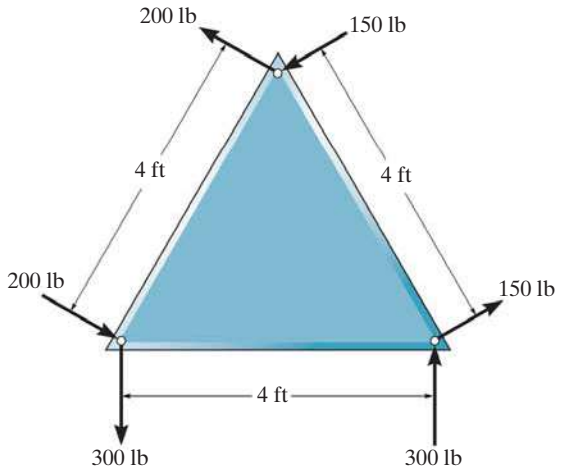

Prob. F4–20

F4–21. Determine the magnitude of **F** so that the resultant couple moment acting on the beam is 1.5 kN · m clockwise.

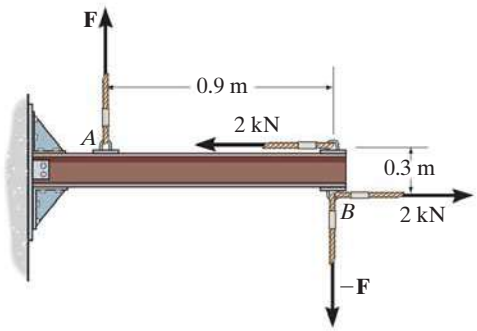

Prob. F4–21

F4–22. Determine the couple moment acting on the beam.

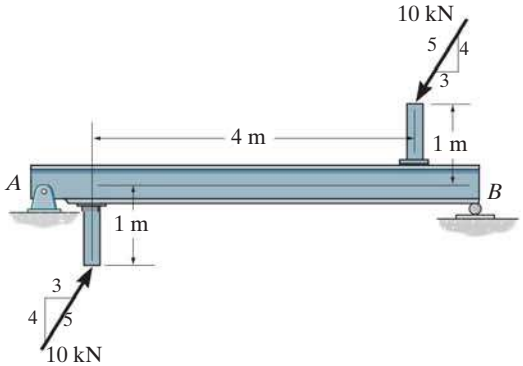

Prob. F4–22

F4–23. Determine the resultant couple moment acting on the pipe assembly.

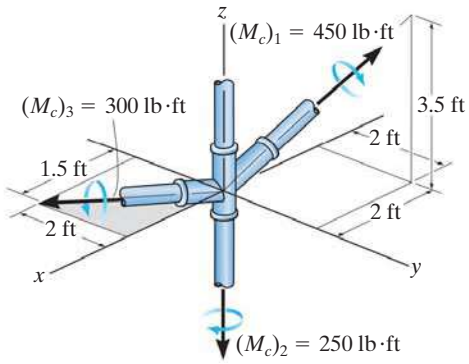

Prob. F4–23

F4–24. Determine the couple moment acting on the pipe assembly and express the result as a Cartesian vector.

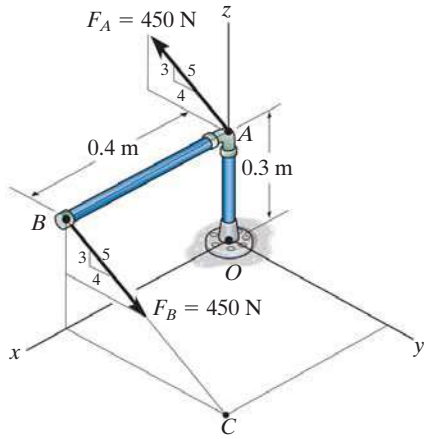

Prob. F4–24

4–67. A clockwise couple $M = 5\ \text{N}\cdot\text{m}$ is resisted by the shaft of the electric motor. Determine the magnitude of the reactive forces $-\mathbf{R}$ and $\mathbf{R}$ which act at supports A and B so that the resultant of the two couples is zero.

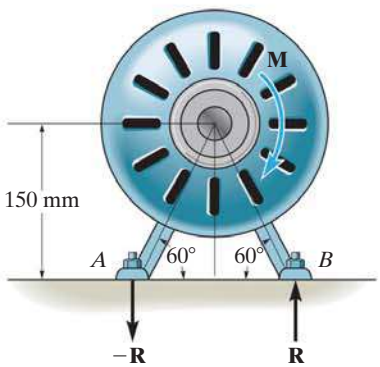

Prob. 4–67

***4–68.** A twist of $4\ \text{N}\cdot\text{m}$ is applied to the handle of the screwdriver. Resolve this couple moment into a pair of couple forces $\mathbf{F}$ exerted on the handle and $\mathbf{P}$ exerted on the blade.

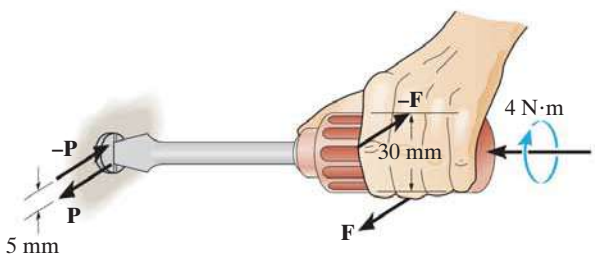

Prob. 4–68

4–69. If the resultant couple of the three couples acting on the triangular block is to be zero, determine the magnitude of forces $\mathbf{F}$ and $\mathbf{P}$.

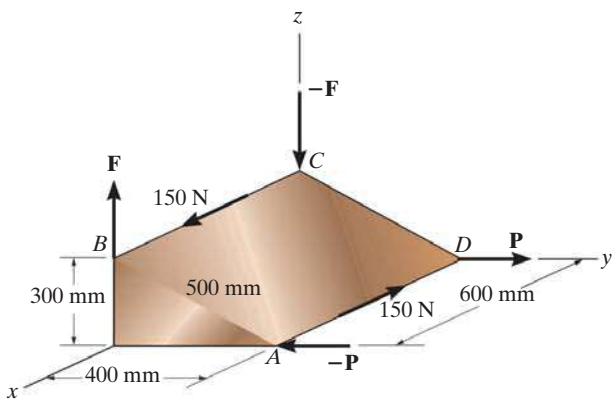

Prob. 4–69

4–70. Two couples act on the beam. If $F = 125\ \text{lb}$, determine the resultant couple moment.

4–71. Two couples act on the beam. Determine the magnitude of $\mathbf{F}$ so that the resultant couple moment is $450\ \text{lb}\cdot\text{ft}$, counterclockwise. Where on the beam does the resultant couple moment act?

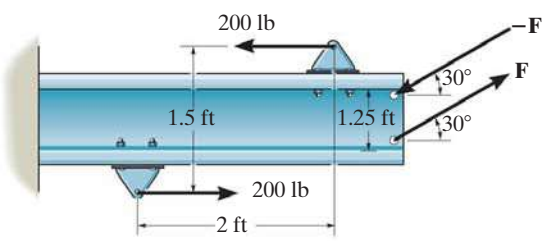

Probs. 4–70/71

***4–72.** Determine the magnitude of the couple forces **F** so that the resultant couple moment on the crank is zero.

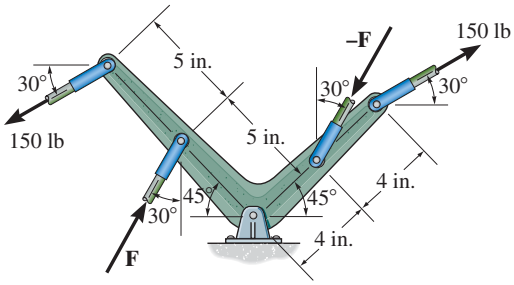

Prob. 4–72

4–73. The ends of the triangular plate are subjected to three couples. Determine the magnitude of the force **F** so that the resultant couple moment is 400 N · m clockwise.

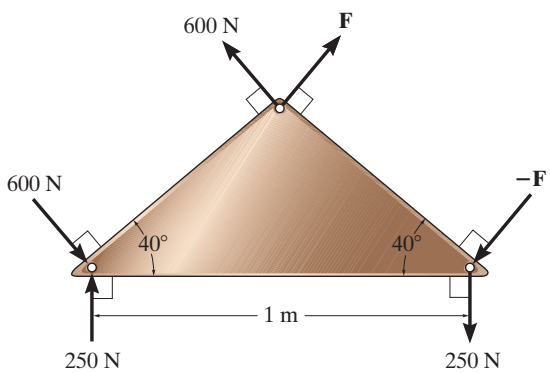

Prob. 4–73

4–74. The man tries to open the valve by applying the couple forces of $F = 75$ N to the wheel. Determine the couple moment produced.

4–75. If the valve can be opened with a couple moment of 25 N · m, determine the required magnitude of each couple force which must be applied to the wheel.

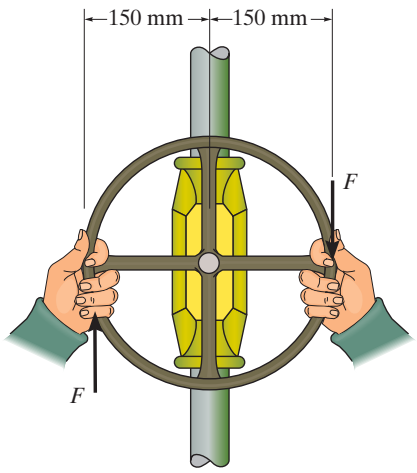

Probs. 4–74/75

***4–76.** Determine the magnitude of **F** so that the resultant couple moment is 12 kN · m, counterclockwise. Where on the beam does the resultant couple moment act?

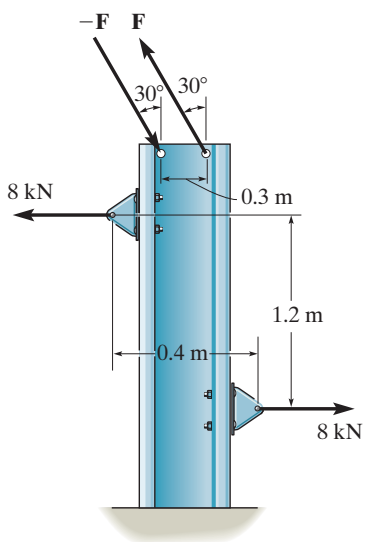

Prob. 4–76

4–77. Two couples act on the beam as shown. If $F = 150$ lb, determine the resultant couple moment.

4–78. Two couples act on the beam as shown. Determine the magnitude of **F** so that the resultant couple moment is 300 lb · ft counterclockwise. Where on the beam does the resultant couple act?

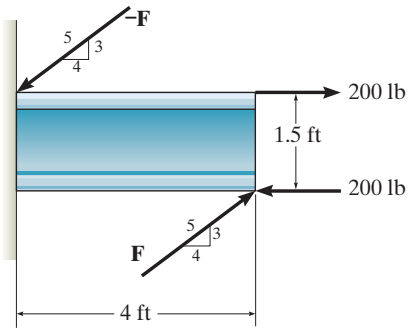

Probs. 4–77/78

4–79. Two couples act on the frame. If the resultant couple moment is to be zero, determine the distance d between the 80-lb couple forces.

***4–80.** Two couples act on the frame. If $d = 4$ ft, determine the resultant couple moment. Compute the result by resolving each force into x and y components and (a) finding the moment of each couple (Eq. 4–13) and (b) summing the moments of all the force components about point A.

4–81. Two couples act on the frame. If $d = 4$ ft, determine the resultant couple moment. Compute the result by resolving each force into x and y components and (a) finding the moment of each couple (Eq. 4–13) and (b) summing the moments of all the force components about point B.

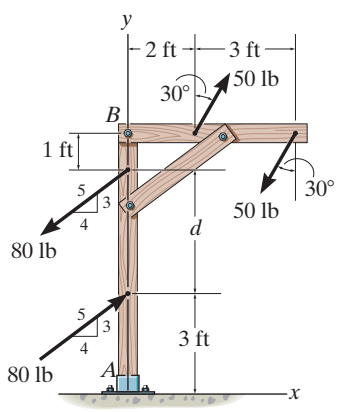

Probs. 4–79/80/81

4–82. Express the moment of the couple acting on the pipe assembly in Cartesian vector form. What is the magnitude of the couple moment?

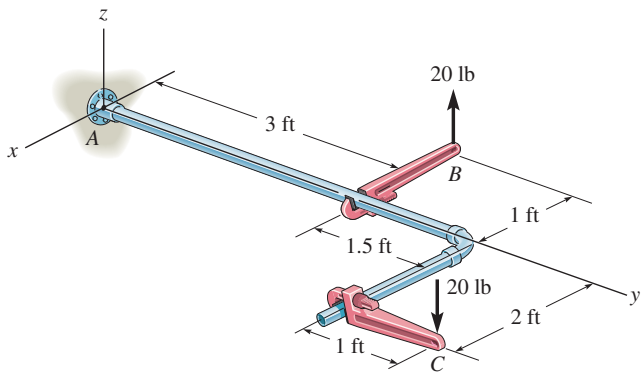

Prob. 4–82

4–83. If $M_1 = 180$ lb · ft, $M_2 = 90$ lb · ft, and $M_3 = 120$ lb · ft, determine the magnitude and coordinate direction angles of the resultant couple moment.

***4–84.** Determine the magnitudes of couple moments $\mathbf{M}_1$, $\mathbf{M}_2$, and $\mathbf{M}_3$ so that the resultant couple moment is zero.

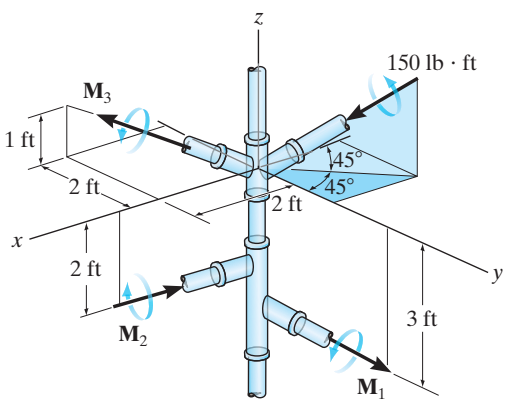

Probs. 4–83/84

EXAMPLE 5.13

The lever ABC is pin supported at A and connected to a short link BD as shown in Fig. 5–22a. If the weight of the members is negligible, determine the force of the pin on the lever at A.

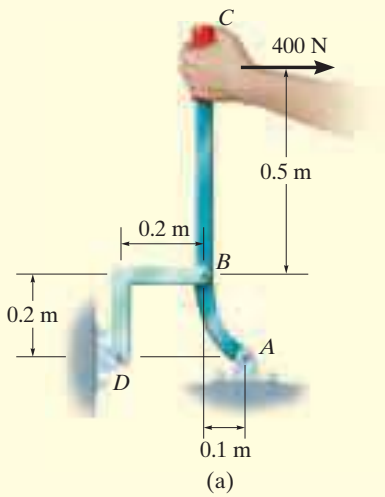

SOLUTION

Free-Body Diagrams. As shown in Fig. 5–22b, the short link BD is a *two-force member*, so the *resultant forces* from the pins D and B must be equal, opposite, and collinear. Although the magnitude of the force is unknown, the line of action is known since it passes through B and D.

Lever ABC is a *three-force member*, and therefore, in order to satisfy moment equilibrium, the three nonparallel forces acting on it must be concurrent at O, Fig. 5–22c. In particular, note that the force $\mathbf{F}$ on the lever at B is equal but opposite to the force $\mathbf{F}$ acting at B on the link. Why? The distance CO must be 0.5 m since the lines of action of $\mathbf{F}$ and the 400-N force are known.

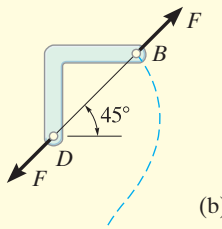

Equations of Equilibrium. By requiring the force system to be concurrent at O, since $\Sigma M_O = 0$, the angle θ which defines the line of action of $\mathbf{F}_A$ can be determined from trigonometry,

$$\theta = \tan^{-1}\left(\frac{0.7}{0.4}\right) = 60.3°$$

Using the x, y axes and applying the force equilibrium equations,

$$\overset{+}{\rightarrow} \Sigma F_x = 0; \qquad F_A \cos 60.3° - F \cos 45° + 400 \text{ N} = 0$$

$$+\uparrow \Sigma F_y = 0; \qquad F_A \sin 60.3° - F \sin 45° = 0$$

Solving, we get

$$F_A = 1.07 \text{ kN} \qquad \textit{Ans.}$$

$$F = 1.32 \text{ kN}$$

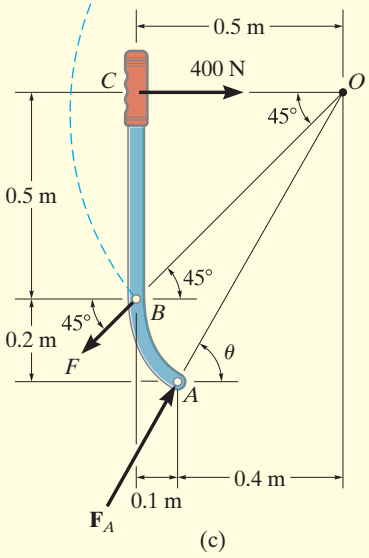

Fig. 5–22

NOTE: We can also solve this problem by representing the force at A by its two components $\mathbf{A}_x$ and $\mathbf{A}_y$ and applying $\Sigma M_A = 0$, $\Sigma F_x = 0$, $\Sigma F_y = 0$ to the lever. Once A_x and A_y are determined, we can get F_A and θ.

PRELIMINARY PROBLEMS

P5–1. Draw the free-body diagram of each object.

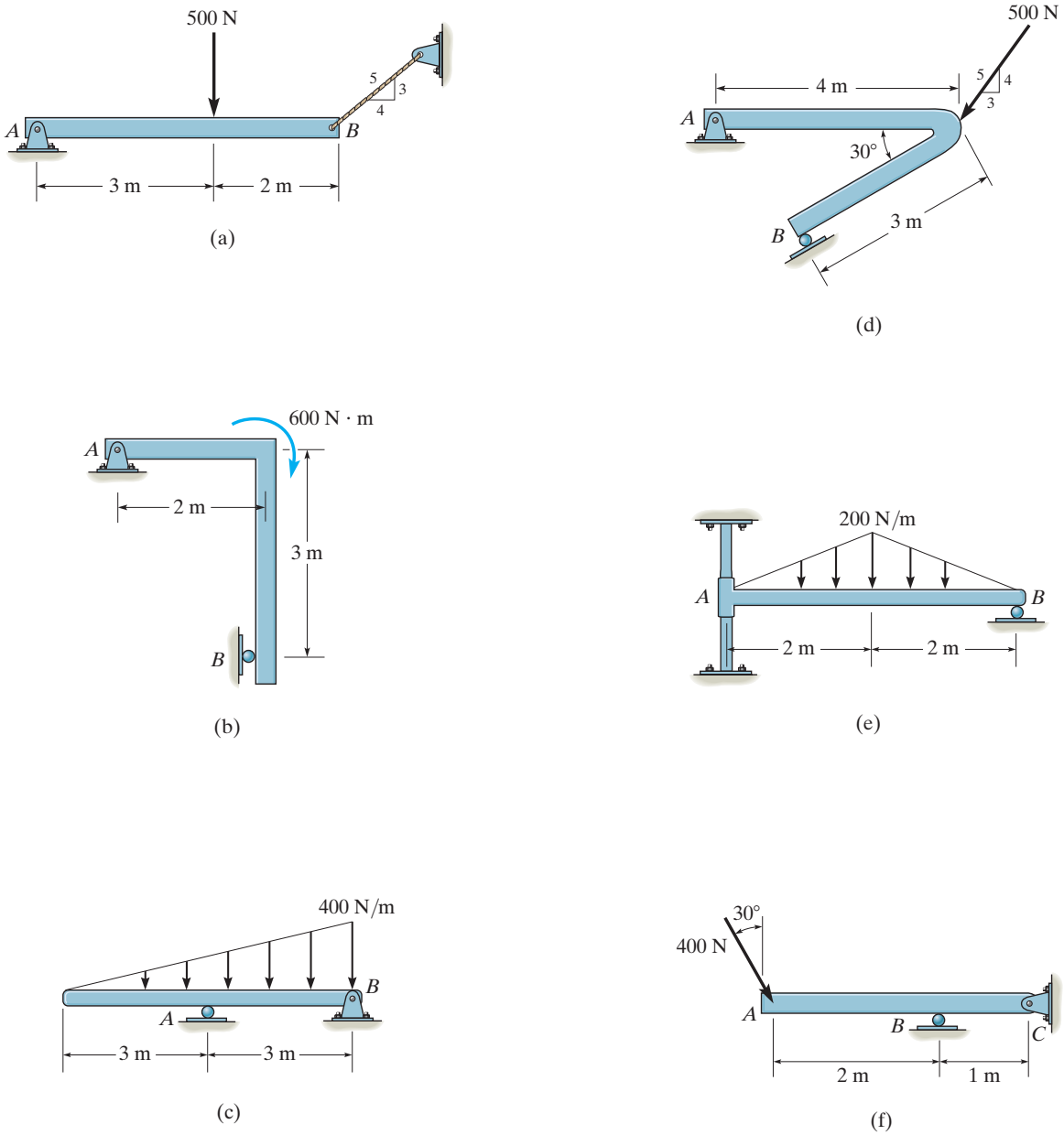

Prob. P5–1

FUNDAMENTAL PROBLEMS

All problem solutions must include an FBD.

F5–1. Determine the horizontal and vertical components of reaction at the supports. Neglect the thickness of the beam.

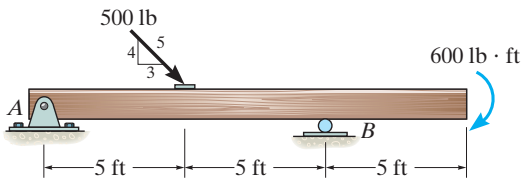

Prob. F5–1

F5–2. Determine the horizontal and vertical components of reaction at the pin A and the reaction on the beam at C.

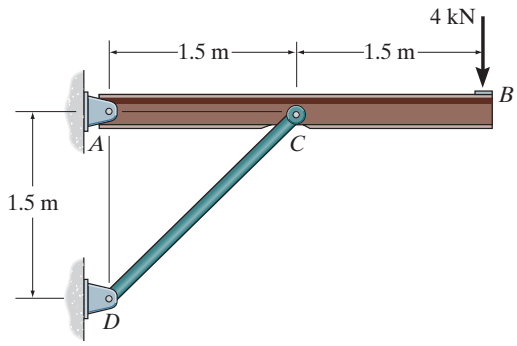

Prob. F5–2

F5–3. The truss is supported by a pin at A and a roller at B. Determine the support reactions.

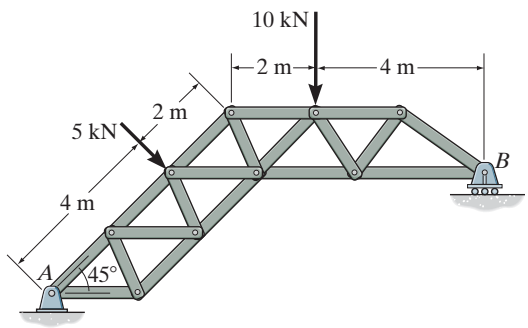

Prob. F5–3

F5–4. Determine the components of reaction at the fixed support A. Neglect the thickness of the beam.

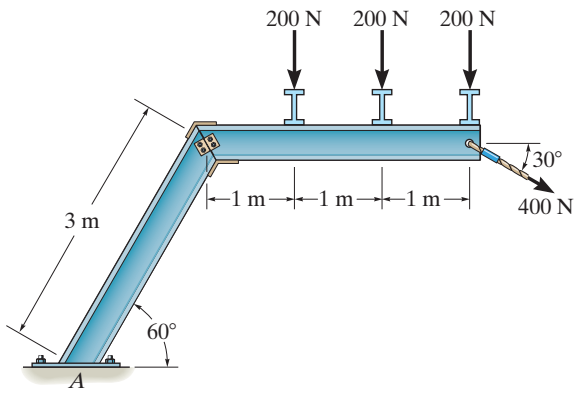

Prob. F5–4

F5–5. The 25-kg bar has a center of mass at G. If it is supported by a smooth peg at C, a roller at A, and cord AB, determine the reactions at these supports.

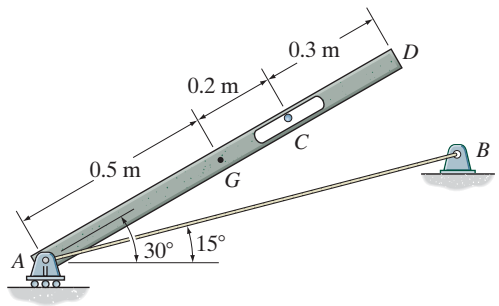

Prob. F5–5

F5–6. Determine the reactions at the smooth contact points A, B, and C on the bar.

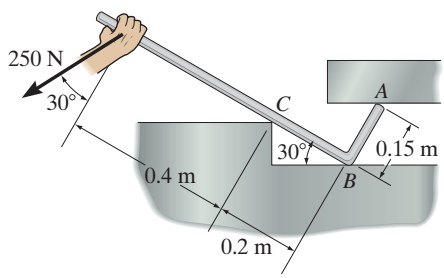

Prob. F5–6

PROBLEMS

All problem solutions must include an FBD.

5–10. Determine the components of the support reactions at the fixed support A on the cantilevered beam.

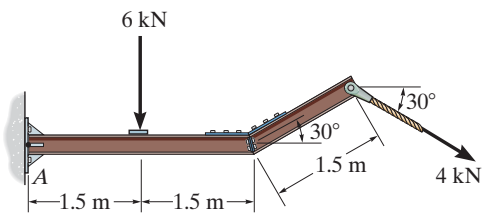

Prob. 5–10

5–11. Determine the reactions at the supports.

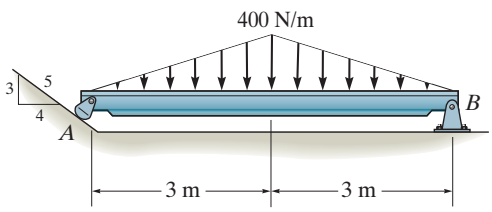

Prob. 5–11

***5–12.** Determine the horizontal and vertical components of reaction at the pin A and the reaction of the rocker B on the beam.

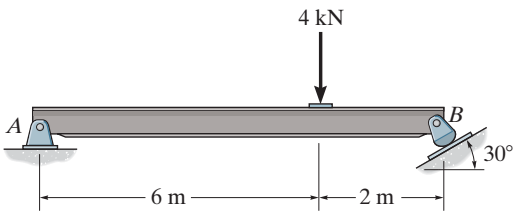

Prob. 5–12

5–13. Determine the reactions at the supports.

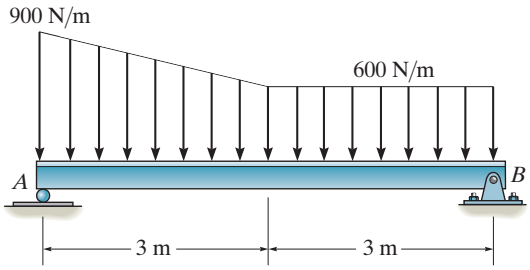

Prob. 5–13

5–14. Determine the reactions at the supports.

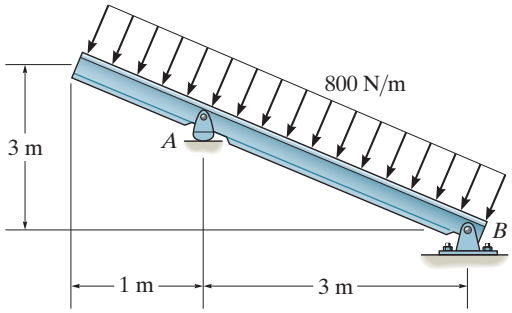

Prob. 5–14

5–15. Determine the reactions at the supports.

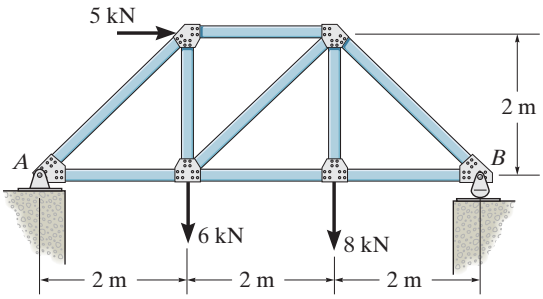

Prob. 5–15

***5–16.** Determine the tension in the cable and the horizontal and vertical components of reaction of the pin A. The pulley at D is frictionless and the cylinder weighs 80 lb.

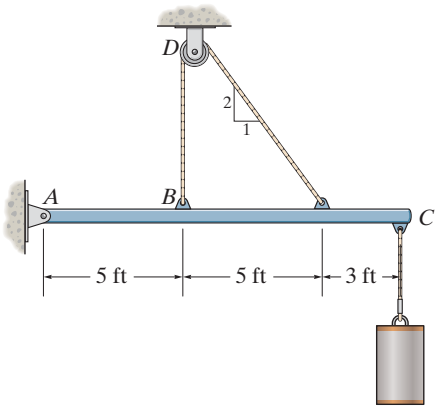

Prob. 5–16

5–17. The man attempts to support the load of boards having a weight W and a center of gravity at G. If he is standing on a smooth floor, determine the smallest angle θ at which he can hold them up in the position shown. Neglect his weight.

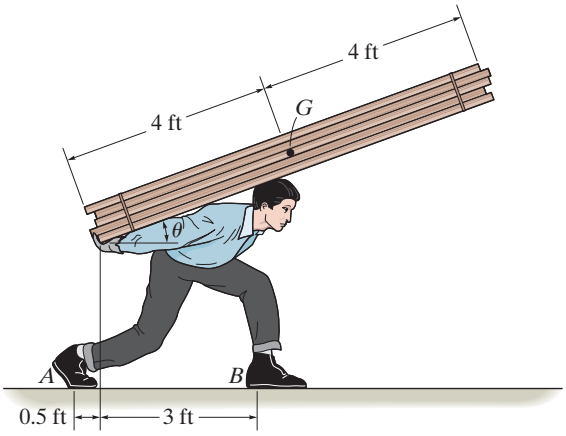

Prob. 5–17

5–18. Determine the components of reaction at the supports A and B on the rod.

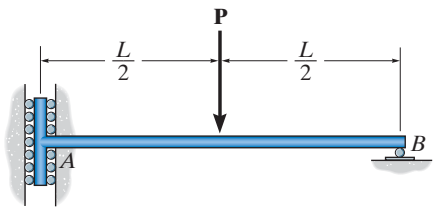

Prob. 5–18

5–19. The man has a weight W and stands at the center of the plank. If the planes at A and B are smooth, determine the tension in the cord in terms of W and θ.

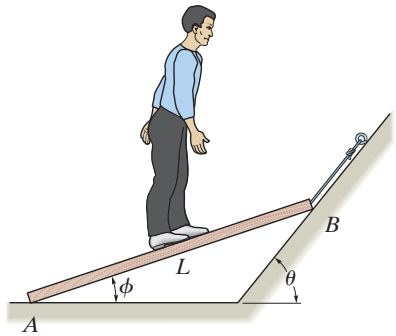

Prob. 5–19

***5–20.** A uniform glass rod having a length L is placed in the smooth hemispherical bowl having a radius r. Determine the angle of inclination θ for equilibrium.

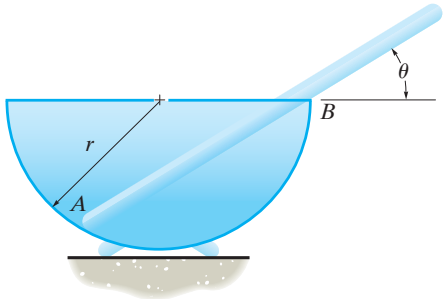

Prob. 5–20

5–21. The uniform rod AB has a mass of 40 kg. Determine the force in the cable when the rod is in the position shown. There is a smooth collar at A.

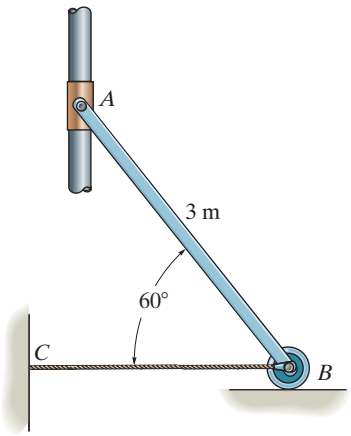

Prob. 5–21

5–22. If the intensity of the distributed load acting on the beam is $w = 3$ kN/m, determine the reactions at the roller A and pin B.

5–23. If the roller at A and the pin at B can support a load up to 4 kN and 8 kN, respectively, determine the maximum intensity of the distributed load w, measured in kN/m, so that failure of the supports does not occur.

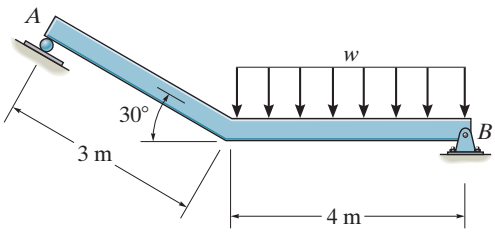

Probs. 5–22/23

***5–24.** The relay regulates voltage and current. Determine the force in the spring CD, which has a stiffness of $k = 120$ N/m, so that it will allow the armature to make contact at A in figure (a) with a vertical force of 0.4 N. Also, determine the force in the spring when the coil is energized and attracts the armature to E, figure (b), thereby breaking contact at A.

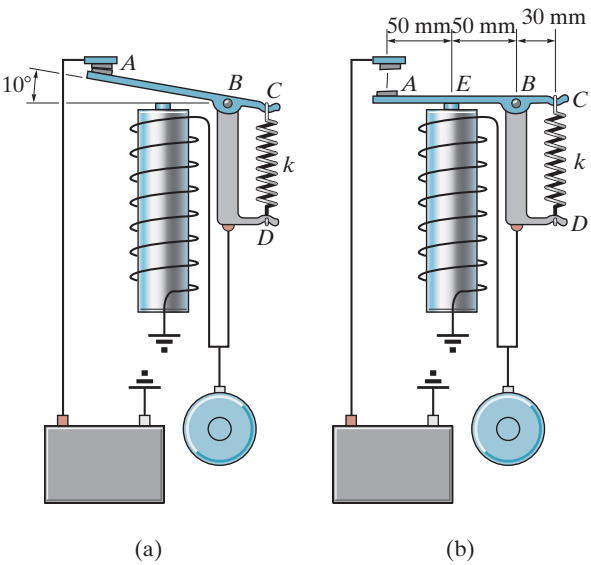

Prob. 5–24

5–25. Determine the reactions on the bent rod which is supported by a smooth surface at B and by a collar at A, which is fixed to the rod and is free to slide over the fixed inclined rod.

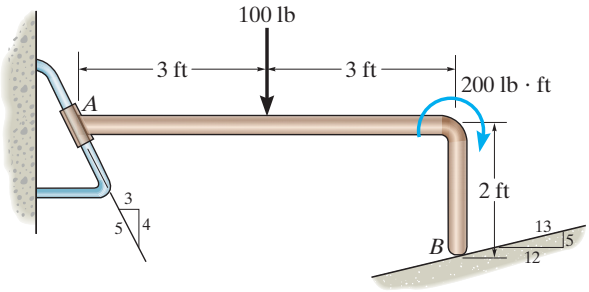

Prob. 5–25

5–26. The mobile crane is symmetrically supported by two outriggers at A and two at B in order to relieve the suspension of the truck upon which it rests and to provide greater stability. If the crane boom and truck have a mass of 18 Mg and center of mass at G_1, and the boom has a mass of 1.8 Mg and a center of mass at G_2, determine the vertical reactions at each of the four outriggers as a function of the boom angle θ when the boom is supporting a load having a mass of 1.2 Mg. Plot the results measured from $\theta = 0°$ to the critical angle where tipping starts to occur.

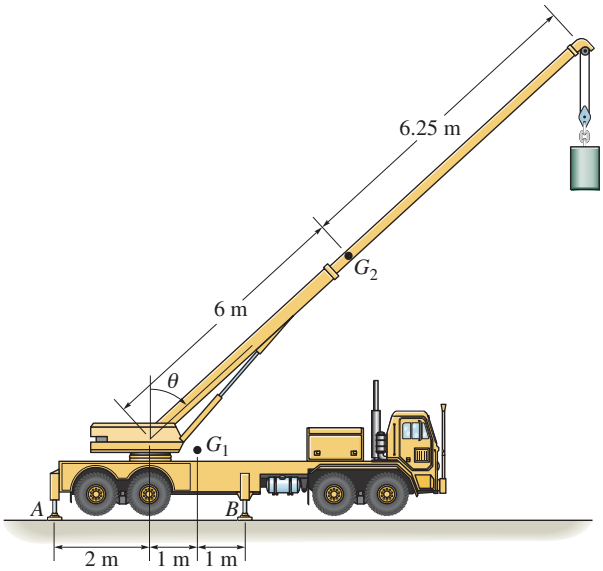

Prob. 5–26

5–27. Determine the reactions acting on the smooth uniform bar, which has a mass of 20 kg.

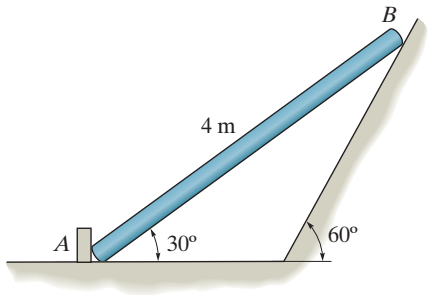

Prob. 5–27

***5–28.** A linear *torsional spring* deforms such that an applied couple moment M is related to the spring's rotation θ in radians by the equation $M = (20\,\theta)$ N · m. If such a spring is attached to the end of a pin-connected uniform 10-kg rod, determine the angle θ for equilibrium. The spring is undeformed when $\theta = 0°$.

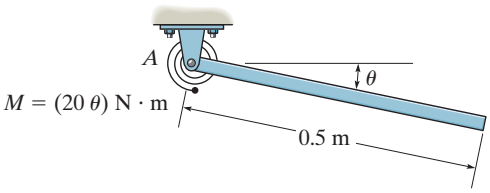

Prob. 5–28

5–29. Determine the force P needed to pull the 50-kg roller over the smooth step. Take $\theta = 30°$.

5–30. Determine the magnitude and direction θ of the minimum force P needed to pull the 50-kg roller over the smooth step.

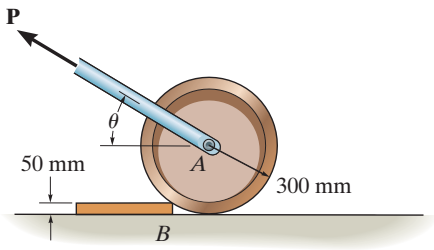

Probs. 5–29/30

5–31. The operation of the fuel pump for an automobile depends on the reciprocating action of the rocker arm ABC, which is pinned at B and is spring loaded at A and D. When the smooth cam C is in the position shown, determine the horizontal and vertical components of force at the pin and the force along the spring DF for equilibrium. The vertical force acting on the rocker arm at A is $F_A = 60$ N, and at C it is $F_C = 125$ N.

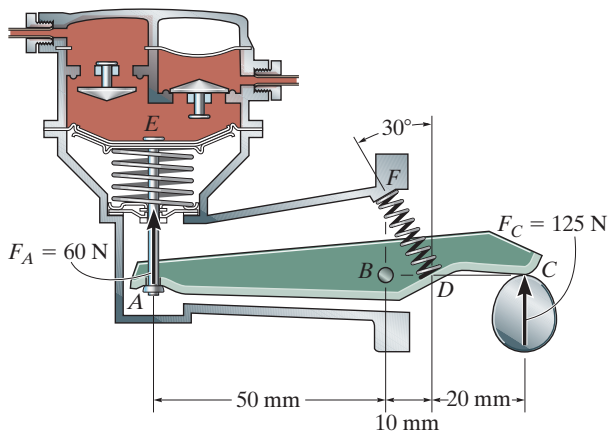

Prob. 5–31

***5–32.** Determine the magnitude of force at the pin A and in the cable BC needed to support the 500-lb load. Neglect the weight of the boom AB.

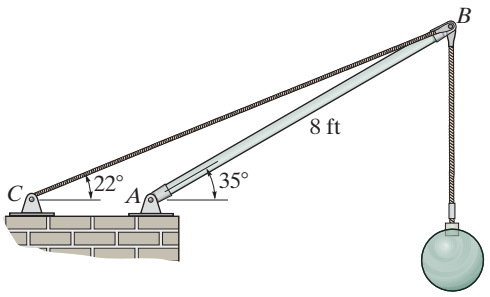

Prob. 5–32

5–33. The dimensions of a jib crane, which is manufactured by the Basick Co., are given in the figure. If the crane has a mass of 800 kg and a center of mass at G, and the maximum rated force at its end is $F = 15$ kN, determine the reactions at its bearings. The bearing at A is a journal bearing and supports only a horizontal force, whereas the bearing at B is a thrust bearing that supports both horizontal and vertical components.

5–34. The dimensions of a jib crane, which is manufactured by the Basick Co., are given in the figure. The crane has a mass of 800 kg and a center of mass at G. The bearing at A is a journal bearing and can support a horizontal force, whereas the bearing at B is a thrust bearing that supports both horizontal and vertical components. Determine the maximum load F that can be suspended from its end if the selected bearings at A and B can sustain a maximum resultant load of 24 kN and 34 kN, respectively.

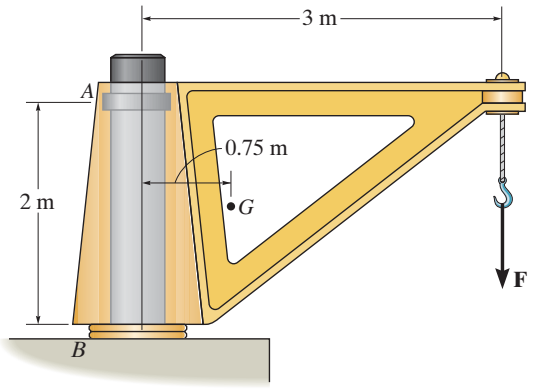

Probs. 5–33/34

5–35. The smooth pipe rests against the opening at the points of contact A, B, and C. Determine the reactions at these points needed to support the force of 300 N. Neglect the pipe's thickness in the calculation.

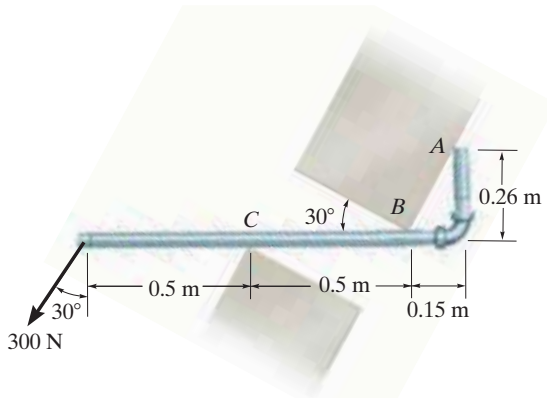

Prob. 5–35

***5–36.** The beam of negligible weight is supported horizontally by two springs. If the beam is horizontal and the springs are unstretched when the load is removed, determine the angle of tilt of the beam when the load is applied.

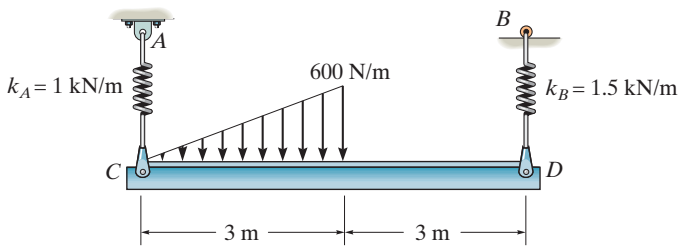

Prob. 5–36

5–37. The cantilevered jib crane is used to support the load of 780 lb. If $x = 5$ ft, determine the reactions at the supports. Note that the supports are collars that allow the crane to rotate freely about the vertical axis. The collar at B supports a force in the vertical direction, whereas the one at A does not.

5–38. The cantilevered jib crane is used to support the load of 780 lb. If the trolley T can be placed anywhere between $1.5 \text{ ft} \leq x \leq 7.5 \text{ ft}$, determine the maximum magnitude of reaction at the supports A and B. Note that the supports are collars that allow the crane to rotate freely about the vertical axis. The collar at B supports a force in the vertical direction, whereas the one at A does not.

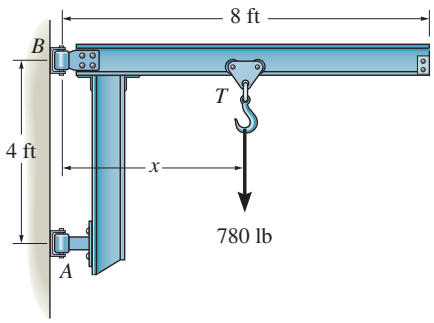

Probs. 5–37/38

5–39. The bar of negligible weight is supported by two springs, each having a stiffness $k = 100$ N/m. If the springs are originally unstretched, and the force is vertical as shown, determine the angle θ the bar makes with the horizontal, when the 30-N force is applied to the bar.

***5–40.** Determine the stiffness k of each spring so that the 30-N force causes the bar to tip $\theta = 15°$ when the force is applied. Originally the bar is horizontal and the springs are unstretched. Neglect the weight of the bar.

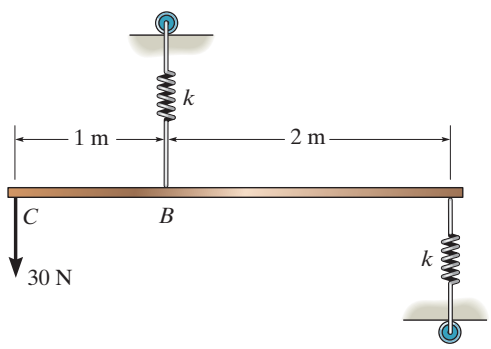

Probs. 5–39/40

5–41. The bulk head AD is subjected to both water and soil-backfill pressures. Assuming AD is "pinned" to the ground at A, determine the horizontal and vertical reactions there and also the required tension in the ground anchor BC necessary for equilibrium. The bulk head has a mass of 800 kg.

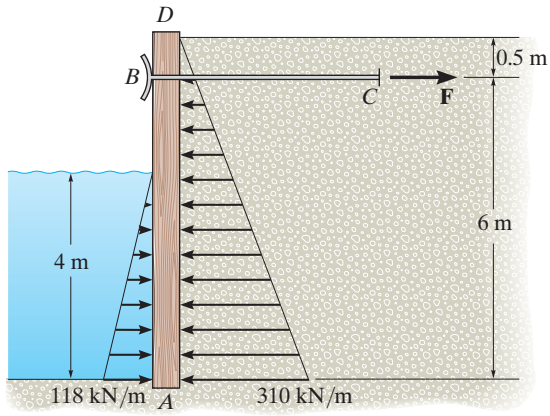

Prob. 5–41

5–42. The boom supports the two vertical loads. Neglect the size of the collars at D and B and the thickness of the boom, and compute the horizontal and vertical components of force at the pin A and the force in cable CB. Set $F_1 = 800$ N and $F_2 = 350$ N.

5–43. The boom is intended to support two vertical loads, $\mathbf{F}_1$ and $\mathbf{F}_2$. If the cable CB can sustain a maximum load of 1500 N before it fails, determine the critical loads if $F_1 = 2F_2$. Also, what is the magnitude of the maximum reaction at pin A?

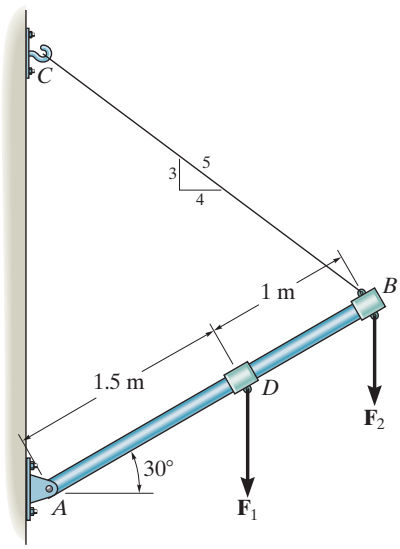

Probs. 5–42/43

***5–44.** The 10-kg uniform rod is pinned at end A. If it is also subjected to a couple moment of 50 N · m, determine the smallest angle θ for equilibrium. The spring is unstretched when $\theta = 0$, and has a stiffness of $k = 60$ N/m.

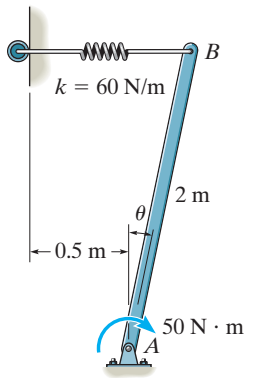

Prob. 5–44

5–45. The man uses the hand truck to move material up the step. If the truck and its contents have a mass of 50 kg with center of gravity at G, determine the normal reaction on both wheels and the magnitude and direction of the minimum force required at the grip B needed to lift the load.

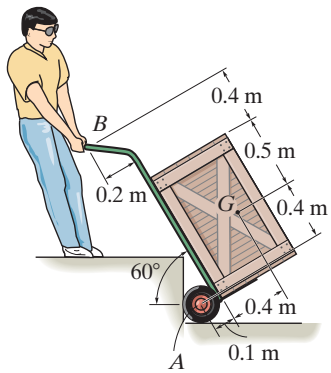

Prob. 5–45

5–46. Three uniform books, each having a weight W and length a, are stacked as shown. Determine the maximum distance d that the top book can extend out from the bottom one so the stack does not topple over.

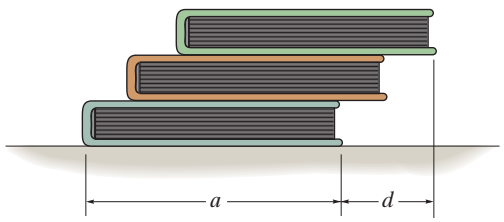

Prob. 5–46

5–47. Determine the reactions at the pin A and the tension in cord BC. Set $F = 40$ kN. Neglect the thickness of the beam.

***5–48.** If rope BC will fail when the tension becomes 50 kN, determine the greatest vertical load F that can be applied to the beam at B. What is the magnitude of the reaction at A for this loading? Neglect the thickness of the beam.

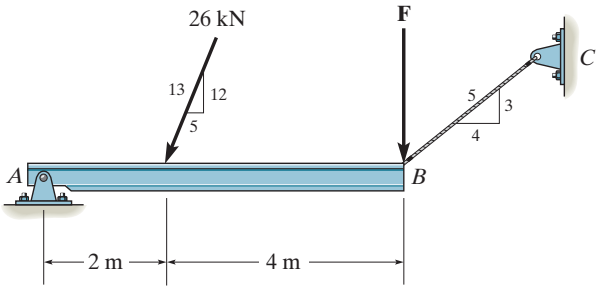

Probs. 5–47/48

5–49. The rigid metal strip of negligible weight is used as part of an electromagnetic switch. If the stiffness of the springs at A and B is $k = 5$ N/m and the strip is originally horizontal when the springs are unstretched, determine the smallest force F needed to close the contact gap at C.

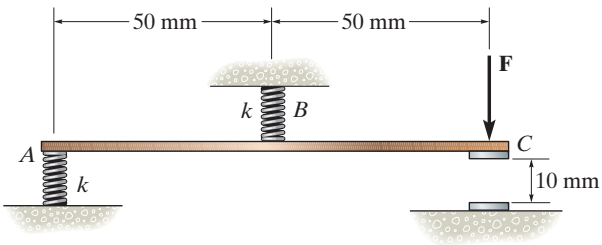

Prob. 5–49

5–50. The rigid metal strip of negligible weight is used as part of an electromagnetic switch. Determine the maximum stiffness k of the springs at A and B so that the contact at C closes when the vertical force developed there is $F = 0.5$ N. Originally the strip is horizontal as shown.

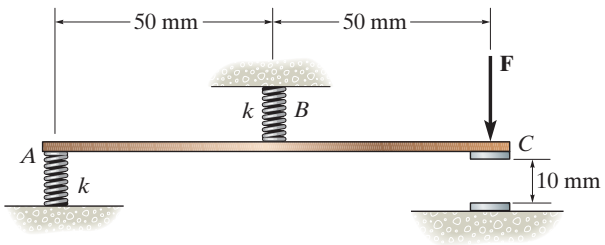

Prob. 5–50

5–51. The cantilever footing is used to support a wall near its edge A so that it causes a uniform soil pressure under the footing. Determine the uniform distribution loads, w_A and w_B, measured in lb/ft at pads A and B, necessary to support the wall forces of 8000 lb and 20 000 lb.

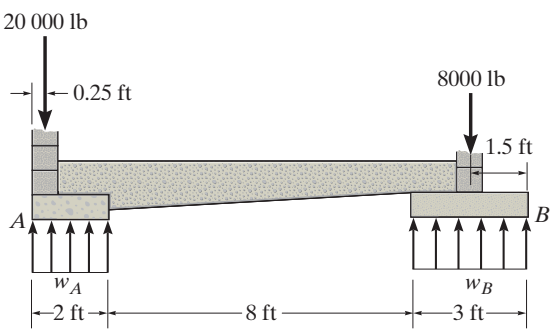

Prob. 5–51

***5–52.** The uniform beam has a weight W and length l and is supported by a pin at A and a cable BC. Determine the horizontal and vertical components of reaction at A and the tension in the cable necessary to hold the beam in the position shown.

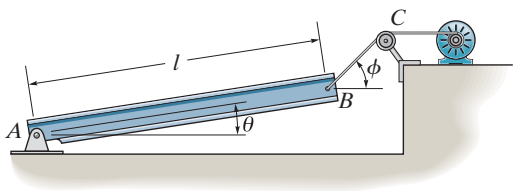

Prob. 5–52

5–53. A boy stands out at the end of the diving board, which is supported by two springs A and B, each having a stiffness of $k = 15$ kN/m. In the position shown the board is horizontal. If the boy has a mass of 40 kg, determine the angle of tilt which the board makes with the horizontal after he jumps off. Neglect the weight of the board and assume it is rigid.

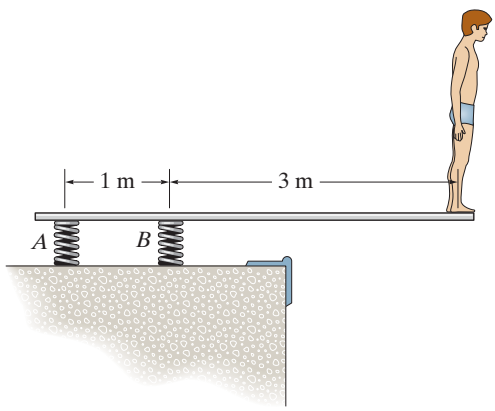

Prob. 5–53

5–54. The 30-N uniform rod has a length of $l = 1$ m. If $s = 1.5$ m, determine the distance h of placement at the end A along the smooth wall for equilibrium.

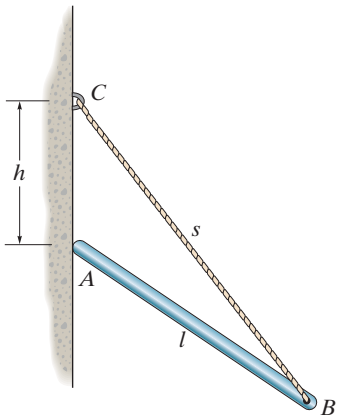

Prob. 5–54

5–55. The uniform rod has a length l and weight W. It is supported at one end A by a smooth wall and the other end by a cord of length s which is attached to the wall as shown. Determine the placement h for equilibrium.

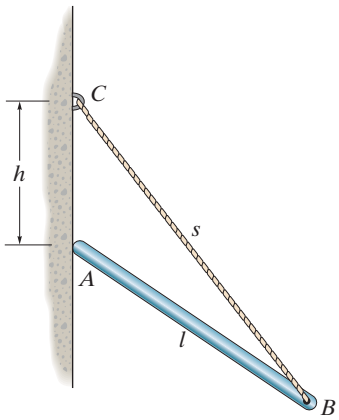

Prob. 5–55

***5–56.** The uniform rod of length L and weight W is supported on the smooth planes. Determine its position θ for equilibrium. Neglect the thickness of the rod.

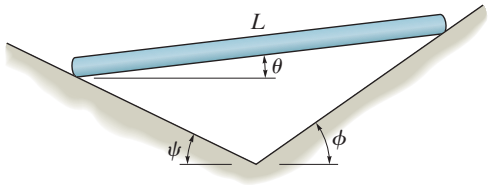

Prob. 5–56

5–57. The beam is subjected to the two concentrated loads. Assuming that the foundation exerts a linearly varying load distribution on its bottom, determine the load intensities w_1 and w_2 for equilibrium if $P = 500$ lb and $L = 12$ ft.

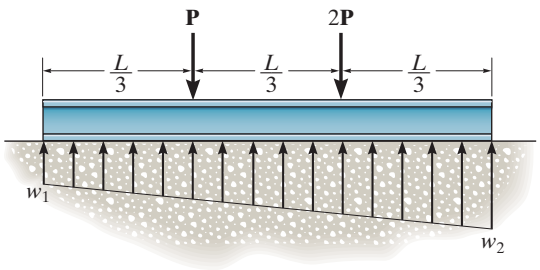

Prob. 5–57

5–58. The beam is subjected to the two concentrated loads. Assuming that the foundation exerts a linearly varying load distribution on its bottom, determine the load intensities w_1 and w_2 for equilibrium in terms of the parameters shown.

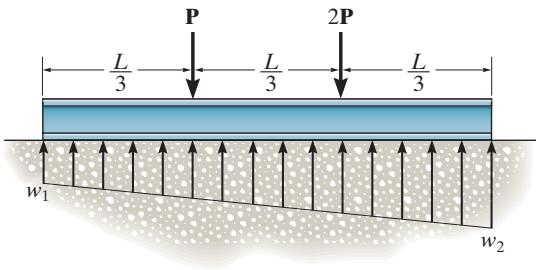

Prob. 5–58

5–59. The rod supports a weight of 200 lb and is pinned at its end A. If it is also subjected to a couple moment of 100 lb · ft, determine the angle θ for equilibrium. The spring has an unstretched length of 2 ft and a stiffness of $k = 50$ lb/ft.

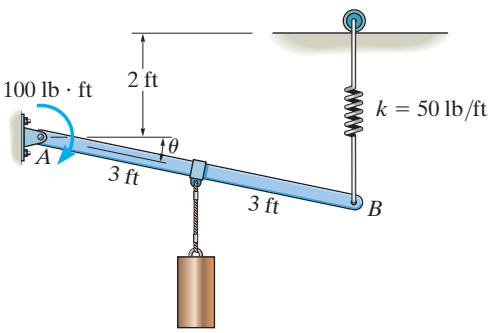

Prob. 5–59

***5–60.** Determine the distance d for placement of the load **P** for equilibrium of the smooth bar in the position θ as shown. Neglect the weight of the bar.

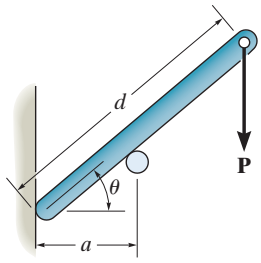

Prob. 5–60

5–61. If $d = 1$ m, and $\theta = 30°$, determine the normal reaction at the smooth supports and the required distance a for the placement of the roller if $P = 600$ N. Neglect the weight of the bar.

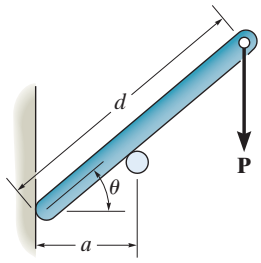

Prob. 5–61

CONCEPTUAL PROBLEMS

C5–1. The tie rod is used to support this overhang at the entrance of a building. If it is pin connected to the building wall at A and to the center of the overhang B, determine if the force in the rod will increase, decrease, or remain the same if (a) the support at A is moved to a lower position D, and (b) the support at B is moved to the outer position C. Explain your answer with an equilibrium analysis, using dimensions and loads. Assume the overhang is pin supported from the building wall.

Prob. C5–1 (© Russell C. Hibbeler)

C5–2. The man attempts to pull the four wheeler up the incline and onto the trailer. From the position shown, is it more effective to pull on the rope at A, or would it be better to pull on the rope at B? Draw a free-body diagram for each case, and do an equilibrium analysis to explain your answer. Use appropriate numerical values to do your calculations.

Prob. C5–2 (© Russell C. Hibbeler)

C5–3. Like all aircraft, this jet plane rests on three wheels. Why not use an additional wheel at the tail for better support? (Can you think of any other reason for not including this wheel?) If there was a fourth tail wheel, draw a free-body diagram of the plane from a side (2 D) view, and show why one would not be able to determine all the wheel reactions using the equations of equilibrium.

Prob. C5–3 (© Russell C. Hibbeler)

C5–4. Where is the best place to arrange most of the logs in the wheelbarrow so that it minimizes the amount of force on the backbone of the person transporting the load? Do an equilibrium analysis to explain your answer.

Prob. C5–4 (© Russell C. Hibbeler)

Chapter 5

(© YuryZap/Shutterstock)

It is important to be able to determine the forces in the cables used to support this boom to ensure that it does not fail. In this chapter we will study how to apply equilibrium methods to determine the forces acting on the supports of a rigid body such as this.

Equilibrium of a Rigid Body

CHAPTER OBJECTIVES

- To develop the equations of equilibrium for a rigid body.
- To introduce the concept of the free-body diagram for a rigid body.
- To show how to solve rigid-body equilibrium problems using the equations of equilibrium.

5.1 Conditions for Rigid-Body Equilibrium

In this section, we will develop both the necessary and sufficient conditions for the equilibrium of the rigid body in Fig. 5–1*a*. As shown, this body is subjected to an external force and couple moment system that is the result of the effects of gravitational, electrical, magnetic, or contact forces caused by adjacent bodies. The internal forces caused by interactions between particles within the body are not shown in this figure because these forces occur in equal but opposite collinear pairs and hence will cancel out, a consequence of Newton's third law.

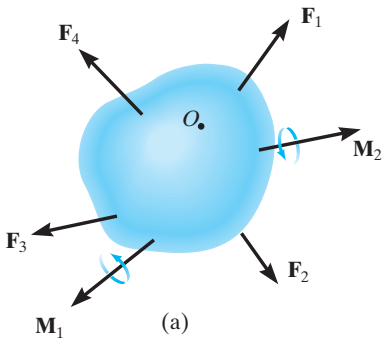

Fig. 5–1

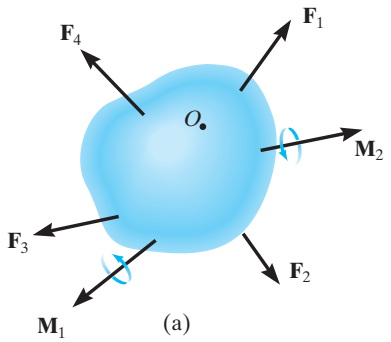

(a)

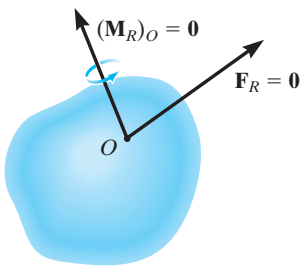

(b)

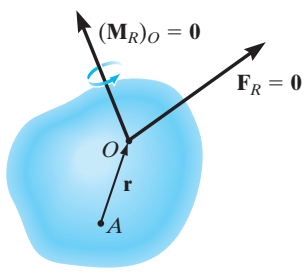

(c)

Fig. 5–1 (cont.)

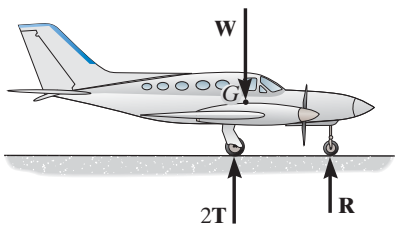

Fig. 5–2

Using the methods of the previous chapter, the force and couple moment system acting on a body can be reduced to an equivalent resultant force and resultant couple moment at any arbitrary point O on or off the body, Fig. 5–1*b*. If this resultant force and couple moment are both equal to zero, then the body is said to be in ***equilibrium***. Mathematically, the equilibrium of a body is expressed as

$$\begin{aligned} \mathbf{F}_R &= \Sigma \mathbf{F} = \mathbf{0} \\ (\mathbf{M}_R)_O &= \Sigma \mathbf{M}_O = \mathbf{0} \end{aligned} \tag{5–1}$$

The first of these equations states that the sum of the forces acting on the body is equal to *zero*. The second equation states that the sum of the moments of all the forces in the system about point O, added to all the couple moments, is equal to *zero*. These two equations are not only necessary for equilibrium, they are also sufficient. To show this, consider summing moments about some other point, such as point A in Fig. 5–1*c*. We require

$$\Sigma \mathbf{M}_A = \mathbf{r} \times \mathbf{F}_R + (\mathbf{M}_R)_O = \mathbf{0}$$

Since $\mathbf{r} \neq \mathbf{0}$, this equation is satisfied if Eqs. 5–1 are satisfied, namely $\mathbf{F}_R = \mathbf{0}$ and $(\mathbf{M}_R)_O = \mathbf{0}$.

When applying the equations of equilibrium, we will assume that the body remains rigid. In reality, however, all bodies deform when subjected to loads. Although this is the case, most engineering materials such as steel and concrete are very rigid and so their deformation is usually very small. Therefore, when applying the equations of equilibrium, we can generally assume that the body will remain *rigid* and *not deform* under the applied load without introducing any significant error. This way the direction of the applied forces and their moment arms with respect to a fixed reference remain the same both before and after the body is loaded.

EQUILIBRIUM IN TWO DIMENSIONS

In the first part of the chapter, we will consider the case where the force system acting on a rigid body lies in or may be projected onto a *single* plane and, furthermore, any couple moments acting on the body are directed perpendicular to this plane. This type of force and couple system is often referred to as a two-dimensional or *coplanar* force system. For example, the airplane in Fig. 5–2 has a plane of symmetry through its center axis, and so the loads acting on the airplane are symmetrical with respect to this plane. Thus, each of the two wing tires will support the same load **T**, which is represented on the side (two-dimensional) view of the plane as 2**T**.

5.2 Free-Body Diagrams

Successful application of the equations of equilibrium requires a complete specification of *all* the known and unknown external forces that act *on* the body. The best way to account for these forces is to draw a ***free-body diagram***. This diagram is a sketch of the outlined shape of the body, which represents it as being *isolated* or "free" from its surroundings, i.e., a "free body." On this sketch it is necessary to show *all* the forces and couple moments that the surroundings exert *on the body* so that these effects can be accounted for when the equations of equilibrium are applied. *A thorough understanding of how to draw a free-body diagram is of primary importance for solving problems in mechanics.*

Support Reactions. Before presenting a formal procedure as to how to draw a free-body diagram, we will first consider the various types of reactions that occur at supports and points of contact between bodies subjected to coplanar force systems. As a general rule,

- A support prevents the translation of a body in a given direction by exerting a force on the body in the opposite direction.
- A support prevents the rotation of a body in a given direction by exerting a couple moment on the body in the opposite direction.

For example, let us consider three ways in which a horizontal member, such as a beam, is supported at its end. One method consists of a *roller* or cylinder, Fig. 5–3*a*. Since this support only prevents the beam from *translating* in the vertical direction, the roller will only exert a *force* on the beam in this direction, Fig. 5–3*b*.

The beam can be supported in a more restrictive manner by using a *pin,* Fig. 5–3*c*. The pin passes through a hole in the beam and two leaves which are fixed to the ground. Here the pin can prevent *translation* of the beam in *any direction* ϕ, Fig. 5–3*d*, and so the pin must exert a *force* **F** on the beam in the opposite direction. For purposes of analysis, it is generally easier to represent this resultant force **F** by its two rectangular components $\mathbf{F}_x$ and $\mathbf{F}_y$, Fig. 5–3*e*. If F_x and F_y are known, then F and ϕ can be calculated.

The most restrictive way to support the beam would be to use a *fixed support* as shown in Fig. 5–3*f*. This support will prevent both *translation and rotation* of the beam. To do this a *force and couple moment* must be developed on the beam at its point of connection, Fig. 5–3*g*. As in the case of the pin, the force is usually represented by its rectangular components $\mathbf{F}_x$ and $\mathbf{F}_y$.

Table 5–1 lists other common types of supports for bodies subjected to coplanar force systems. (In all cases the angle θ is assumed to be known.) Carefully study each of the symbols used to represent these supports and the types of reactions they exert on their contacting members.

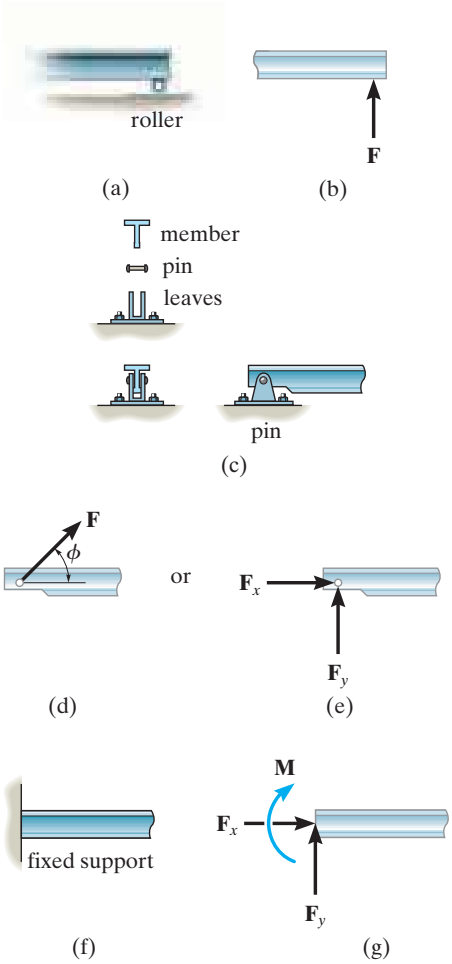

Fig. 5–3

TABLE 5–1 Supports for Rigid Bodies Subjected to Two-Dimensional Force Systems

Types of Connection	Reaction	Number of Unknowns
(1) 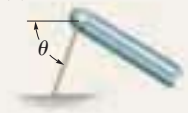 cable	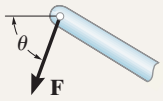	One unknown. The reaction is a tension force which acts away from the member in the direction of the cable.
(2) 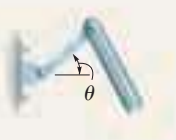 weightless link	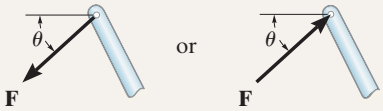	One unknown. The reaction is a force which acts along the axis of the link.
(3)  roller	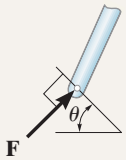	One unknown. The reaction is a force which acts perpendicular to the surface at the point of contact.
(4)  rocker	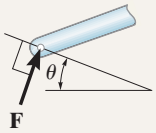	One unknown. The reaction is a force which acts perpendicular to the surface at the point of contact.
(5) 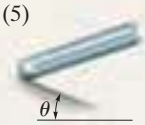 smooth contacting surface	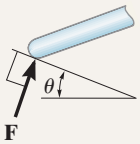	One unknown. The reaction is a force which acts perpendicular to the surface at the point of contact.
(6) 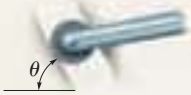 roller or pin in confined smooth slot	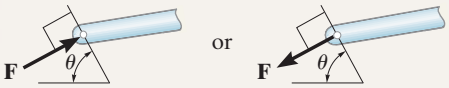	One unknown. The reaction is a force which acts perpendicular to the slot.
(7) 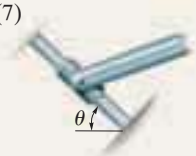 member pin connected to collar on smooth rod	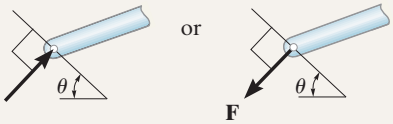	One unknown. The reaction is a force which acts perpendicular to the rod.

continued

TABLE 5–1 Continued

Types of Connection	Reaction	Number of Unknowns
(8) 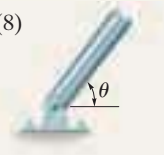 smooth pin or hinge	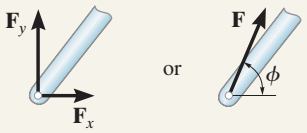	Two unknowns. The reactions are two components of force, or the magnitude and direction ϕ of the resultant force. Note that ϕ and θ are not necessarily equal [usually not, unless the rod shown is a link as in (2)].
(9)  member fixed connected to collar on smooth rod	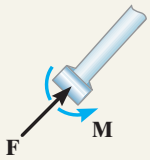	Two unknowns. The reactions are the couple moment and the force which acts perpendicular to the rod.
(10)  fixed support	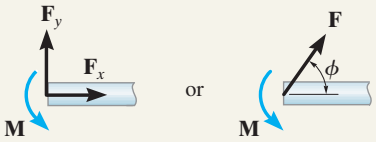	Three unknowns. The reactions are the couple moment and the two force components, or the couple moment and the magnitude and direction ϕ of the resultant force.

Typical examples of actual supports are shown in the following sequence of photos. The numbers refer to the connection types in Table 5–1.

(© Russell C. Hibbeler)

The cable exerts a force on the bracket in the direction of the cable. (1)

The rocker support for this bridge girder allows horizontal movement so the bridge is free to expand and contract due to a change in temperature. (4) (© Russell C. Hibbeler)

This concrete girder rests on the ledge that is assumed to act as a smooth contacting surface. (5) (© Russell C. Hibbeler)

Typical pin support for a beam. (8) (© Russell C. Hibbeler)

The floor beams of this building are welded together and thus form fixed connections. (10) (© Russell C. Hibbeler)

Internal Forces. As stated in Sec. 5.1, the internal forces that act between adjacent particles in a body always occur in collinear pairs such that they have the same magnitude and act in opposite directions (Newton's third law). Since these forces cancel each other, they will not create an *external effect* on the body. It is for this reason that the internal forces should not be included on the free-body diagram if the entire body is to be considered. For example, the engine shown in Fig. 5–4*a* has a free-body diagram shown in Fig. 5–4*b*. The internal forces between all its connected parts, such as the screws and bolts, will cancel out because they form equal and opposite collinear pairs. Only the external forces $\mathbf{T}_1$ and $\mathbf{T}_2$, exerted by the chains and the engine weight **W**, are shown on the free-body diagram.

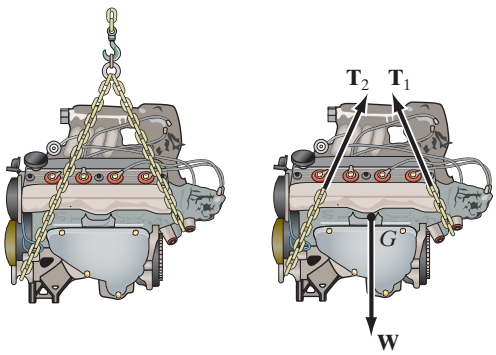

(a) (b)

Fig. 5–4

Weight and the Center of Gravity. When a body is within a gravitational field, then each of its particles has a specified weight. It was shown in Sec. 4.8 that such a system of forces can be reduced to a single resultant force acting through a specified point. We refer to this force resultant as the *weight* **W** of the body and to the location of its point of application as the ***center of gravity***. The methods used for its determination will be developed in Chapter 9.

In the examples and problems that follow, if the weight of the body is important for the analysis, this force will be reported in the problem statement. Also, when the body is *uniform* or made from the same material, the center of gravity will be located at the body's *geometric center* or *centroid*; however, if the body consists of a nonuniform distribution of material, or has an unusual shape, then the location of its center of gravity *G* will be given.

Idealized Models. When an engineer performs a force analysis of any object, he or she considers a corresponding analytical or idealized model that gives results that approximate as closely as possible the actual situation. To do this, careful choices have to be made so that selection of the type of supports, the material behavior, and the object's dimensions can be justified. This way one can feel confident that any

design or analysis will yield results which can be trusted. In complex cases this process may require developing several different models of the object that must be analyzed. In any case, this selection process requires both skill and experience.

The following two cases illustrate what is required to develop a proper model. In Fig. 5–5*a*, the steel beam is to be used to support the three roof joists of a building. For a force analysis it is reasonable to assume the material (steel) is rigid since only very small deflections will occur when the beam is loaded. A bolted connection at *A* will allow for any slight rotation that occurs here when the load is applied, and so a *pin* can be considered for this support. At *B* a *roller* can be considered since this support offers no resistance to horizontal movement. Building code is used to specify the roof loading *A* so that the joist loads **F** can be calculated. These forces will be larger than any actual loading on the beam since they account for extreme loading cases and for dynamic or vibrational effects. Finally, the weight of the beam is generally neglected when it is small compared to the load the beam supports. The idealized model of the beam is therefore shown with average dimensions *a, b, c*, and *d* in Fig. 5–5*b*.

As a second case, consider the lift boom in Fig. 5–6*a*. By inspection, it is supported by a pin at *A* and by the hydraulic cylinder *BC*, which can be approximated as a weightless link. The material can be assumed rigid, and with its density known, the weight of the boom and the location of its center of gravity *G* are determined. When a design loading **P** is specified, the idealized model shown in Fig. 5–6*b* can be used for a force analysis. Average dimensions (not shown) are used to specify the location of the loads and the supports.

Idealized models of specific objects will be given in some of the examples throughout the text. It should be realized, however, that each case represents the reduction of a practical situation using simplifying assumptions like the ones illustrated here.

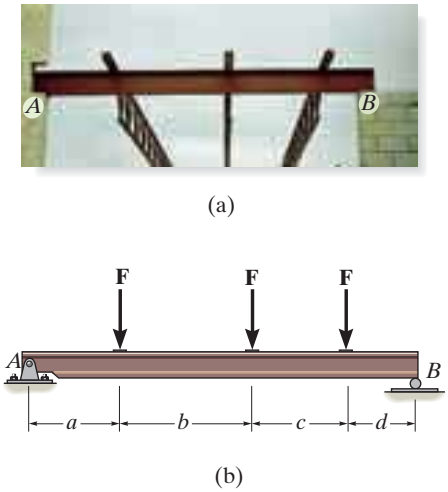

Fig. 5–5 (© Russell C. Hibbeler)

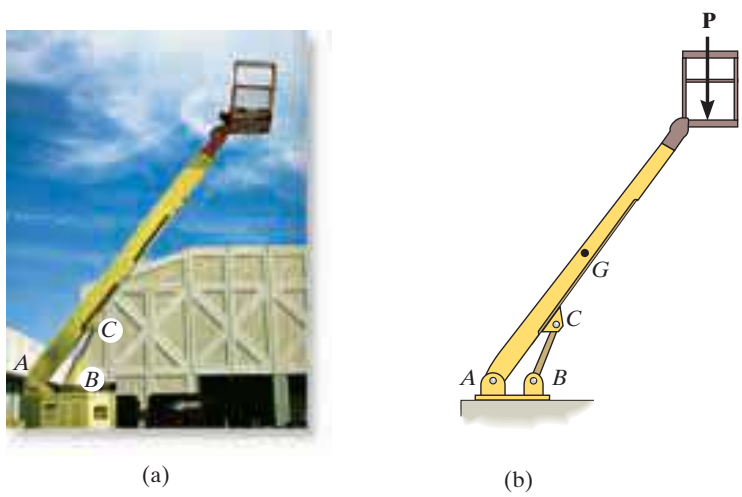

Fig. 5–6 (© Russell C. Hibbeler)

Important Points

- No equilibrium problem should be solved without *first drawing the free-body diagram*, so as to account for all the forces and couple moments that act on the body.
- If a support *prevents translation* of a body in a particular direction, then the support, when it is removed, exerts a *force* on the body in that direction.
- If *rotation is prevented*, then the support, when it is removed, exerts a *couple moment* on the body.
- Study Table 5–1.
- Internal forces are *never shown* on the free-body diagram since they occur in equal but opposite collinear pairs and therefore cancel out.
- The weight of a body is an external force, and its effect is represented by a single resultant force acting through the body's center of gravity G.
- *Couple moments* can be placed anywhere on the free-body diagram since they are *free vectors. Forces* can act at any point along their lines of action since they are *sliding vectors*.

Procedure for Analysis

To construct a free-body diagram for a rigid body or any group of bodies considered as a single system, the following steps should be performed:

Draw Outlined Shape.

Imagine the body to be *isolated* or cut "free" from its constraints and connections and draw (sketch) its outlined shape. Be sure to *remove all the supports* from the body.

Show All Forces and Couple Moments.

Identify all the known and unknown *external forces* and couple moments that *act on the body*. Those generally encountered are due to (1) applied loadings, (2) reactions occurring at the supports or at points of contact with other bodies (see Table 5–1), and (3) the weight of the body. To account for all these effects, it may help to trace over the boundary, carefully noting each force or couple moment acting on it.

Identify Each Loading and Give Dimensions.

The forces and couple moments that are known should be labeled with their proper magnitudes and directions. Letters are used to represent the magnitudes and direction angles of forces and couple moments that are unknown. Establish an x, y coordinate system so that these unknowns, A_x, A_y, etc., can be identified. Finally, indicate the dimensions of the body necessary for calculating the moments of forces.

EXAMPLE 5.1

Draw the free-body diagram of the uniform beam shown in Fig. 5–7*a*. The beam has a mass of 100 kg.

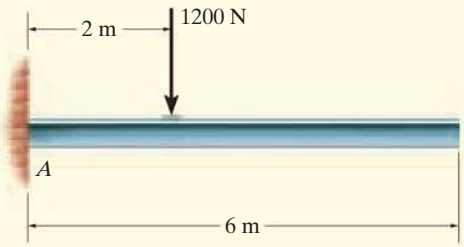

(a)

SOLUTION

The free-body diagram of the beam is shown in Fig. 5–7*b*. Since the support at A is fixed, the wall exerts three reactions *on the beam*, denoted as $\mathbf{A}_x$, $\mathbf{A}_y$, and $\mathbf{M}_A$. The magnitudes of these reactions are *unknown*, and their sense has been *assumed*. The weight of the beam, $W = 100(9.81)\text{ N} = 981\text{ N}$, acts through the beam's center of gravity G, which is 3 m from A since the beam is uniform.

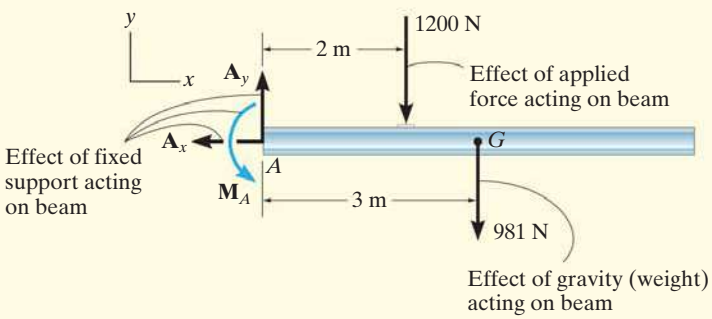

(b)

Fig. 5–7

Draw the free-body diagram of the foot lever shown in Fig. 5–8*a*. The operator applies a vertical force to the pedal so that the spring is stretched 1.5 in. and the force on the link at *B* is 20 lb.

(a)

Fig. 5–8 (© Russell C. Hibbeler)

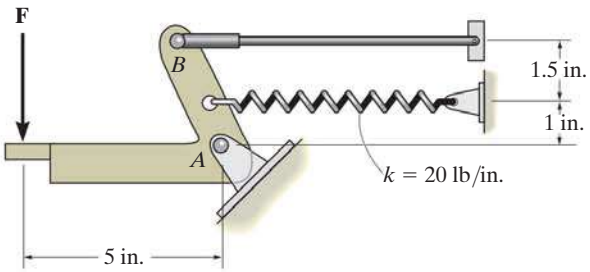

(b)

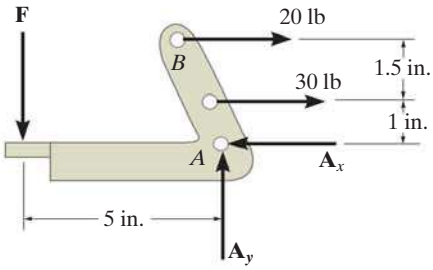

(c)

SOLUTION

By inspection of the photo the lever is loosely bolted to the frame at *A* and so this bolt acts as a pin. (See (8) in Table 5–1.) Although not shown here the link at *B* is pinned at both ends and so it is like (2) in Table 5–1. After making the proper measurements, the idealized model of the lever is shown in Fig. 5–8*b*. From this, the free-body diagram is shown in Fig. 5–8*c*. Since the pin at *A* is *removed*, it exerts force components $\mathbf{A}_x$ and $\mathbf{A}_y$ on the lever. The link exerts a force of 20 lb, acting in the direction of the link. In addition the spring also exerts a horizontal force on the lever. If the stiffness is measured and found to be $k = 20\ \text{lb/in.}$, then since the stretch $s = 1.5$ in., using Eq. 3–2, $F_s = ks = 20\ \text{lb/in.}\ (1.5\ \text{in.}) = 30\ \text{lb}$. Finally, the operator's shoe applies a vertical force of **F** on the pedal. The dimensions of the lever are also shown on the free-body diagram, since this information will be useful when calculating the moments of the forces. As usual, the senses of the unknown forces at *A* have been assumed. The correct senses will become apparent after solving the equilibrium equations.

EXAMPLE 5.3

Two smooth pipes, each having a mass of 300 kg, are supported by the forked tines of the tractor in Fig. 5–9*a*. Draw the free-body diagrams for each pipe and both pipes together.

(a)
(© Russell C. Hibbeler)

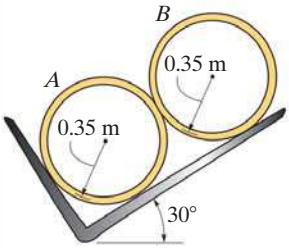

(b)

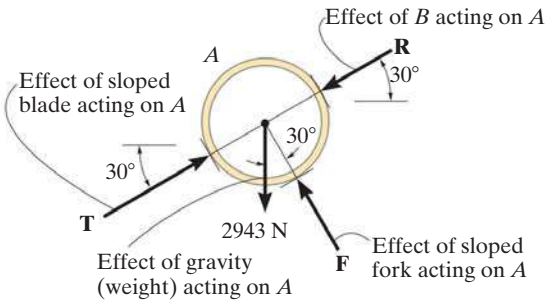

(c)

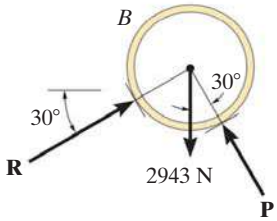

(d)

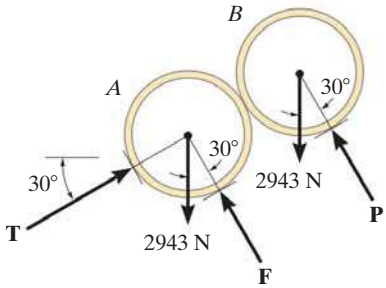

(e)

Fig. 5–9

SOLUTION

The idealized model from which we must draw the free-body diagrams is shown in Fig. 5–9*b*. Here the pipes are identified, the dimensions have been added, and the physical situation reduced to its simplest form.

Removing the surfaces of contact, the free-body diagram for pipe *A* is shown in Fig. 5–9*c*. Its weight is $W = 300(9.81)\text{ N} = 2943\text{ N}$. Assuming all contacting surfaces are *smooth*, the reactive forces **T**, **F**, **R** act in a direction *normal* to the tangent at their surfaces of contact.

The free-body diagram of the isolated pipe *B* is shown in Fig. 5–9*d*. Can you identify each of the three forces acting *on this pipe*? In particular, note that **R**, representing the force of *A* on *B*, Fig. 5–9*d*, is equal and opposite to **R** representing the force of *B* on *A*, Fig. 5–9*c*. This is a consequence of Newton's third law of motion.

The free-body diagram of both pipes combined ("system") is shown in Fig. 5–9*e*. Here the contact force **R**, which acts between *A* and *B*, is considered as an *internal* force and hence is not shown on the free-body diagram. That is, it represents a pair of equal but opposite collinear forces which cancel each other.

Draw the free-body diagram of the unloaded platform that is suspended off the edge of the oil rig shown in Fig. 5–10*a*. The platform has a mass of 200 kg.

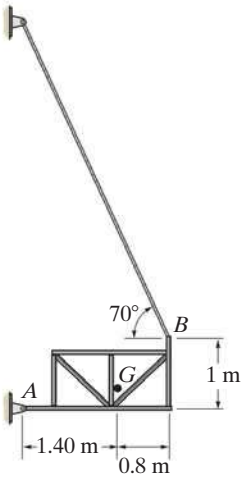

(b)


(a)

Fig. 5–10 (© Russell C. Hibbeler)

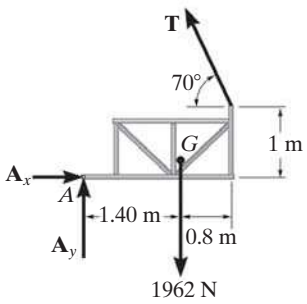

(c)

SOLUTION

The idealized model of the platform will be considered in two dimensions because by observation the loading and the dimensions are all symmetrical about a vertical plane passing through its center, Fig. 5–10*b*. The connection at *A* is considered to be a pin, and the cable supports the platform at *B*. The direction of the cable and average dimensions of the platform are listed, and the center of gravity *G* has been determined. It is from this model that we have drawn the free-body diagram shown in Fig. 5–10*c*. The platform's weight is $200(9.81) = 1962$ N. The supports have been *removed*, and the force components $\mathbf{A}_x$ and $\mathbf{A}_y$ along with the cable force $\mathbf{T}$ represent the reactions that *both* pins and *both* cables exert on the platform, Fig. 5–10*a*. As a result, half their magnitudes are developed on each side of the platform.

5–1. Draw the free-body diagram for the following problems.

a) The cantilevered beam in Prob. 5–10.

b) The beam in Prob. 5–11.

c) The beam in Prob. 5–12.

d) The beam in Prob. 5–14.

5–2. Draw the free-body diagram for the following problems.

a) The truss in Prob. 5–15.

b) The beam in Prob. 5–16.

c) The man and load in Prob. 5–17.

d) The beam in Prob. 5–18.

5–3. Draw the free-body diagram for the following problems.

a) The man and beam in Prob. 5–19.

b) The rod in Prob. 5–20.

c) The rod in Prob. 5–21.

d) The beam in Prob. 5–22.

***5–4.** Draw the free-body diagram for the following problems.

a) The beam in Prob. 5–25.

b) The crane and boom in Prob. 5–26.

c) The bar in Prob. 5–27.

d) The rod in Prob. 5–28.

5–5. Draw the free-body diagram for the following problems.

a) The boom in Prob. 5–32.

b) The jib crane in Prob. 5–33.

c) The smooth pipe in Prob. 5–35.

d) The beam in Prob. 5–36.

5–6. Draw the free-body diagram for the following problems.

a) The jib crane in Prob. 5–37.

b) The bar in Prob. 5–39.

c) The bulkhead in Prob. 5–41.

d) The boom in Prob. 5–42.

5–7. Draw the free-body diagram for the following problems.

a) The rod in Prob. 5–44.

b) The hand truck and load when it is lifted in Prob. 5–45.

c) The beam in Prob. 5–47.

d) The cantilever footing in Prob. 5–51.

***5–8.** Draw the free-body diagram for the following problems.

a) The beam in Prob. 5–52.

b) The boy and diving board in Prob. 5–53.

c) The rod in Prob. 5–54.

d) The rod in Prob. 5–56.

5–9. Draw the free-body diagram for the following problems.

a) The beam in Prob. 5–57.

b) The rod in Prob. 5–59.

c) The bar in Prob. 5–60.

5.3 Equations of Equilibrium

In Sec. 5.1 we developed the two equations which are both necessary and sufficient for the equilibrium of a rigid body, namely, $\Sigma \mathbf{F} = \mathbf{0}$ and $\Sigma \mathbf{M}_O = \mathbf{0}$. When the body is subjected to a system of forces, which all lie in the x–y plane, then the forces can be resolved into their x and y components. Consequently, the conditions for equilibrium in two dimensions are

$$\boxed{\begin{aligned} \Sigma F_x &= 0 \\ \Sigma F_y &= 0 \\ \Sigma M_O &= 0 \end{aligned}} \qquad (5\text{–}2)$$

Here ΣF_x and ΣF_y represent, respectively, the algebraic sums of the x and y components of all the forces acting on the body, and ΣM_O represents the algebraic sum of the couple moments and the moments of all the force components about the z axis, which is perpendicular to the x–y plane and passes through the arbitrary point O.

Alternative Sets of Equilibrium Equations. Although Eqs. 5–2 are *most often* used for solving coplanar equilibrium problems, two *alternative* sets of three independent equilibrium equations may also be used. One such set is

$$\begin{aligned} \Sigma F_x &= 0 \\ \Sigma M_A &= 0 \\ \Sigma M_B &= 0 \end{aligned} \qquad (5\text{–}3)$$

When using these equations it is required that a line passing through points A and B is *not parallel* to the y axis. To prove that Eqs. 5–3 provide the *conditions* for equilibrium, consider the free-body diagram of the plate shown in Fig. 5–11a. Using the methods of Sec. 4.7, all the forces on the free-body diagram may be replaced by an equivalent resultant force $\mathbf{F}_R = \Sigma \mathbf{F}$, acting at point A, and a resultant couple moment $(\mathbf{M}_R)_A = \Sigma \mathbf{M}_A$, Fig. 5–11$b$. If $\Sigma M_A = 0$ is satisfied, it is necessary that $(\mathbf{M}_R)_A = \mathbf{0}$. Furthermore, in order that $\mathbf{F}_R$ satisfy $\Sigma F_x = 0$, it must have *no component* along the x axis, and therefore $\mathbf{F}_R$ must be parallel to the y axis, Fig. 5–11c. Finally, if it is required that $\Sigma M_B = 0$, where B does not lie on the line of action of $\mathbf{F}_R$, then $\mathbf{F}_R = \mathbf{0}$. Since Eqs. 5–3 show that both of these resultants are zero, indeed the body in Fig. 5–11a must be in equilibrium.

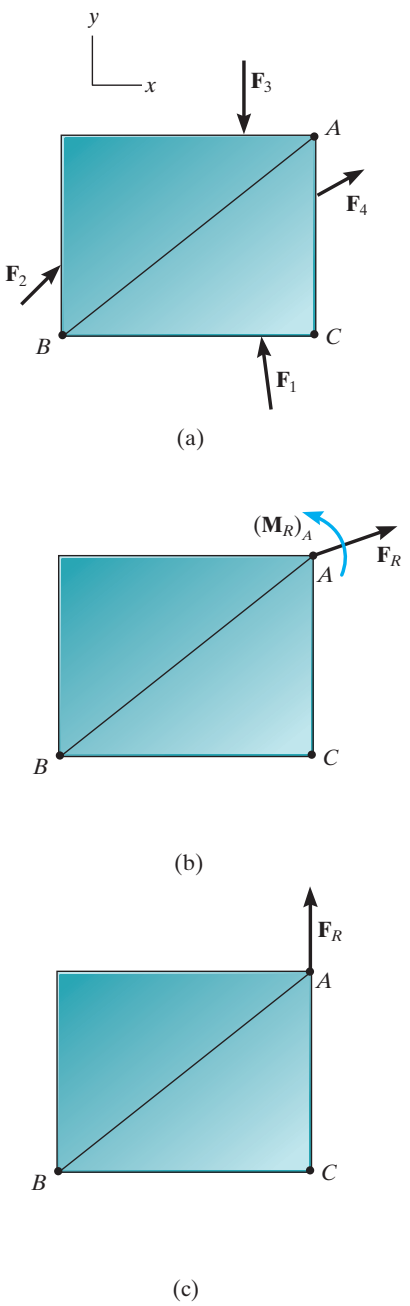

Fig. 5–11

A second alternative set of equilibrium equations is

$$\begin{aligned} \Sigma M_A &= 0 \\ \Sigma M_B &= 0 \\ \Sigma M_C &= 0 \end{aligned} \tag{5–4}$$

Here it is necessary that points A, B, and C do not lie on the same line. To prove that these equations, when satisfied, ensure equilibrium, consider again the free-body diagram in Fig. 5–11b. If $\Sigma M_A = 0$ is to be satisfied, then $(\mathbf{M}_R)_A = \mathbf{0}$. $\Sigma M_C = 0$ is satisfied if the line of action of $\mathbf{F}_R$ passes through point C as shown in Fig. 5–11c. Finally, if we require $\Sigma M_B = 0$, it is necessary that $\mathbf{F}_R = \mathbf{0}$, and so the plate in Fig. 5–11a must then be in equilibrium.

Procedure for Analysis

Coplanar force equilibrium problems for a rigid body can be solved using the following procedure.

Free-Body Diagram.

- Establish the x, y coordinate axes in any suitable orientation.
- Remove all supports and draw an outlined shape of the body.
- Show all the forces and couple moments acting on the body.
- Label all the loadings and specify their directions relative to the x or y axis. The sense of a force or couple moment having an *unknown* magnitude but known line of action can be *assumed*.
- Indicate the dimensions of the body necessary for computing the moments of forces.

Equations of Equilibrium.

- Apply the moment equation of equilibrium, $\Sigma M_O = 0$, about a point (O) that lies at the intersection of the lines of action of two unknown forces. In this way, the moments of these unknowns are zero about O, and a *direct solution* for the third unknown can be determined.
- When applying the force equilibrium equations, $\Sigma F_x = 0$ and $\Sigma F_y = 0$, orient the x and y axes along lines that will provide the simplest resolution of the forces into their x and y components.
- If the solution of the equilibrium equations yields a negative scalar for a force or couple moment magnitude, this indicates that the sense is opposite to that which was assumed on the free-body diagram.

Determine the horizontal and vertical components of reaction on the beam caused by the pin at B and the rocker at A as shown in Fig. 5–12a. Neglect the weight of the beam.

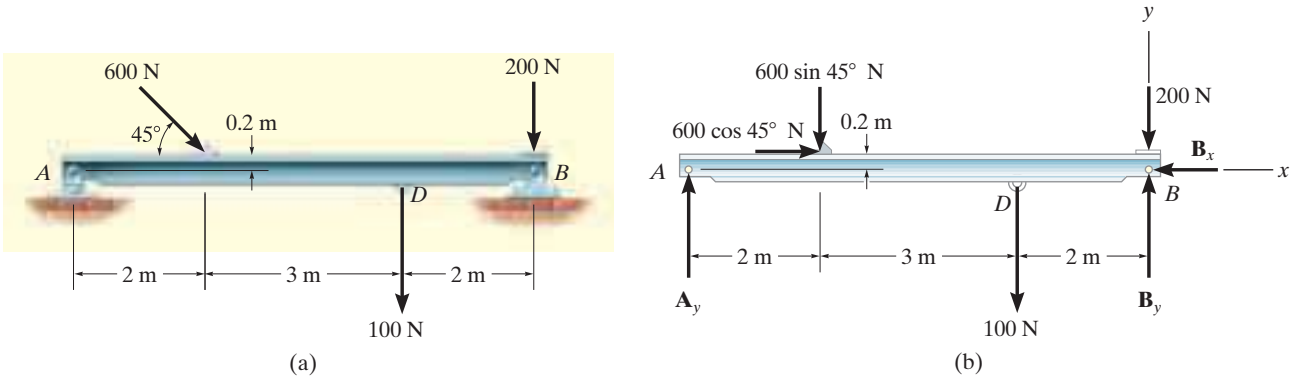

Fig. 5–12

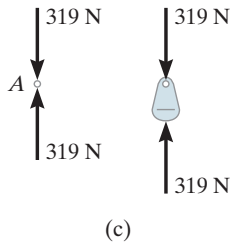

SOLUTION

Free-Body Diagram. The supports are *removed*, and the free-body diagram of the beam is shown in Fig. 5–12b. (See Example 5.1.) For simplicity, the 600-N force is represented by its x and y components as shown in Fig. 5–12b.

Equations of Equilibrium. Summing forces in the x direction yields

$$\overset{+}{\rightarrow} \Sigma F_x = 0; \qquad 600 \cos 45° \text{ N} - B_x = 0$$

$$B_x = 424 \text{ N} \qquad \textit{Ans.}$$

A direct solution for $\mathbf{A}_y$ can be obtained by applying the moment equation $\Sigma M_B = 0$ about point B.

$$\circlearrowleft + \Sigma M_B = 0; \qquad 100 \text{ N}(2 \text{ m}) + (600 \sin 45° \text{ N})(5 \text{ m})$$

$$- (600 \cos 45° \text{ N})(0.2 \text{ m}) - A_y(7 \text{ m}) = 0$$

$$A_y = 319 \text{ N} \qquad \textit{Ans.}$$

Summing forces in the y direction, using this result, gives

$$+\uparrow \Sigma F_y = 0; \qquad 319 \text{ N} - 600 \sin 45° \text{ N} - 100 \text{ N} - 200 \text{ N} + B_y = 0$$

$$B_y = 405 \text{ N} \qquad \textit{Ans.}$$

NOTE: Remember, the support forces in Fig. 5–12b are the result of pins that *act on the beam*. The opposite forces act on the pins. For example, Fig. 5–12c shows the equilibrium of the pin at A and the rocker.

EXAMPLE 5.6

The cord shown in Fig. 5–13*a* supports a force of 100 lb and wraps over the frictionless pulley. Determine the tension in the cord at C and the horizontal and vertical components of reaction at pin A.

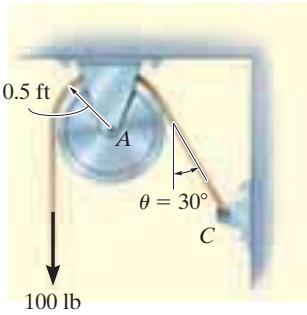

(a)

Fig. 5–13

SOLUTION

Free-Body Diagrams. The free-body diagrams of the cord and pulley are shown in Fig. 5–13*b*. Note that the principle of action, equal but opposite reaction must be carefully observed when drawing each of these diagrams: the cord exerts an unknown load distribution p on the pulley at the contact surface, whereas the pulley exerts an equal but opposite effect on the cord. For the solution, however, it is simpler to *combine* the free-body diagrams of the pulley and this portion of the cord, so that the distributed load becomes *internal* to this "system" and is therefore eliminated from the analysis, Fig. 5–13*c*.

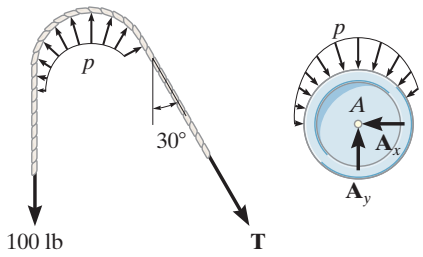

(b)

Equations of Equilibrium. Summing moments about point A to eliminate $\mathbf{A}_x$ and $\mathbf{A}_y$, Fig. 5–13*c*, we have

$$\circlearrowleft + \Sigma M_A = 0; \qquad 100 \text{ lb } (0.5 \text{ ft}) - T(0.5 \text{ ft}) = 0$$

$$T = 100 \text{ lb} \qquad \textit{Ans.}$$

Using this result,

$$\overset{+}{\rightarrow} \Sigma F_x = 0; \qquad -A_x + 100 \sin 30° \text{ lb} = 0$$

$$A_x = 50.0 \text{ lb} \qquad \textit{Ans.}$$

$$+\uparrow \Sigma F_y = 0; \qquad A_y - 100 \text{ lb} - 100 \cos 30° \text{ lb} = 0$$

$$A_y = 187 \text{ lb} \qquad \textit{Ans.}$$

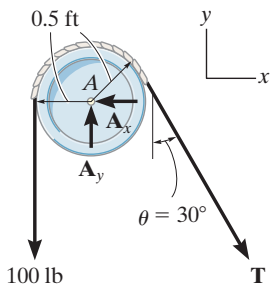

(c)

NOTE: From the moment equation, it is seen that the tension remains *constant* as the cord passes over the pulley. (This of course is true for *any angle* θ at which the cord is directed and for *any radius* r of the pulley.)

EXAMPLE 5.7

The member shown in Fig. 5–14*a* is pin connected at A and rests against a smooth support at B. Determine the horizontal and vertical components of reaction at the pin A.

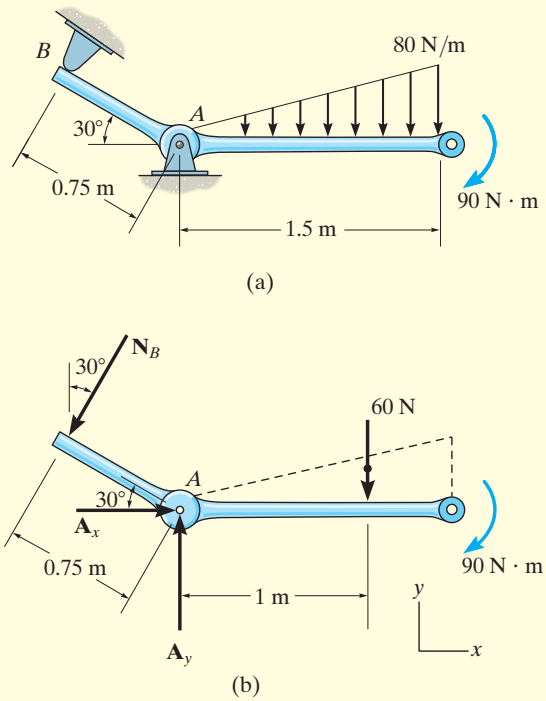

Fig. 5–14

SOLUTION

Free-Body Diagram. As shown in Fig. 5–14*b*, the supports are removed and the reaction $\mathbf{N}_B$ is perpendicular to the member at B. Also, horizontal and vertical components of reaction are represented at A. The resultant of the distributed loading is $\frac{1}{2}(1.5\text{ m})(80\text{ N/m}) = 60\text{ N}$. It acts through the centroid of the triangle, 1 m from A as shown.

Equations of Equilibrium. Summing moments about A, we obtain a direct solution for N_B,

$$\circlearrowleft + \Sigma M_A = 0; \quad -90\text{ N}\cdot\text{m} - 60\text{ N}(1\text{ m}) + N_B(0.75\text{ m}) = 0$$

$$N_B = 200\text{ N}$$

Using this result,

$$\xrightarrow{+} \Sigma F_x = 0; \qquad A_x - 200\sin 30^\circ\text{ N} = 0$$

$$A_x = 100\text{ N} \qquad \textit{Ans.}$$

$$+\uparrow \Sigma F_y = 0; \qquad A_y - 200\cos 30^\circ\text{ N} - 60\text{ N} = 0$$

$$A_y = 233\text{ N} \qquad \textit{Ans.}$$

EXAMPLE 5.8

The box wrench in Fig. 5–15*a* is used to tighten the bolt at A. If the wrench does not turn when the load is applied to the handle, determine the torque or moment applied to the bolt and the force of the wrench on the bolt.

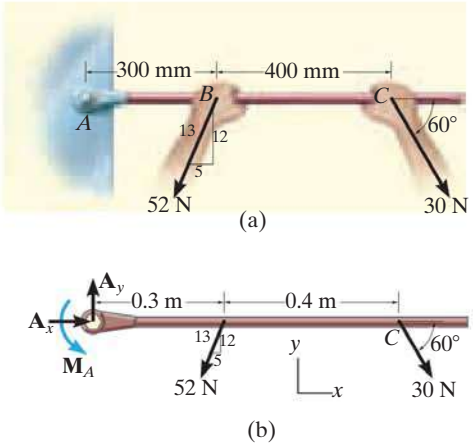

Fig. 5–15

SOLUTION

Free-Body Diagram. The free-body diagram for the wrench is shown in Fig. 5–15*b*. Since the bolt acts as a "fixed support," when it is removed, it exerts force components $\mathbf{A}_x$ and $\mathbf{A}_y$ and a moment $\mathbf{M}_A$ on the wrench at A.

Equations of Equilibrium.

$$\overset{+}{\rightarrow}\Sigma F_x = 0; \qquad A_x - 52\left(\tfrac{5}{13}\right)\text{ N} + 30\cos 60^\circ\text{ N} = 0$$

$$A_x = 5.00\text{ N} \qquad \textit{Ans.}$$

$$+\uparrow\Sigma F_y = 0; \qquad A_y - 52\left(\tfrac{12}{13}\right)\text{ N} - 30\sin 60^\circ\text{ N} = 0$$

$$A_y = 74.0\text{ N} \qquad \textit{Ans.}$$

$$\circlearrowleft+\Sigma M_A = 0; \quad M_A - \left[52\left(\tfrac{12}{13}\right)\text{N}\right](0.3\text{ m}) - (30\sin 60^\circ\text{ N})(0.7\text{ m}) = 0$$

$$M_A = 32.6\text{ N}\cdot\text{m} \qquad \textit{Ans.}$$

Note that $\mathbf{M}_A$ must be *included* in this moment summation. This couple moment is a free vector and represents the twisting resistance of the bolt on the wrench. By Newton's third law, the wrench exerts an equal but opposite moment or torque on the bolt. Furthermore, the resultant force on the wrench is

$$F_A = \sqrt{(5.00)^2 + (74.0)^2} = 74.1\text{ N} \qquad \textit{Ans.}$$

NOTE: Although only *three* independent equilibrium equations can be written for a rigid body, it is a good practice to *check* the calculations using a fourth equilibrium equation. For example, the above computations may be verified in part by summing moments about point C:

$$\circlearrowleft+\Sigma M_C = 0; \quad \left[52\left(\tfrac{12}{13}\right)\text{N}\right](0.4\text{ m}) + 32.6\text{ N}\cdot\text{m} - 74.0\text{ N}(0.7\text{ m}) = 0$$

$$19.2\text{ N}\cdot\text{m} + 32.6\text{ N}\cdot\text{m} - 51.8\text{ N}\cdot\text{m} = 0$$

Determine the horizontal and vertical components of reaction on the member at the pin A, and the normal reaction at the roller B in Fig. 5–16a.

SOLUTION

Free-Body Diagram. All the supports are removed and so the free-body diagram is shown in Fig. 5–16b. The pin at A exerts two components of reaction on the member, $\mathbf{A}_x$ and $\mathbf{A}_y$.

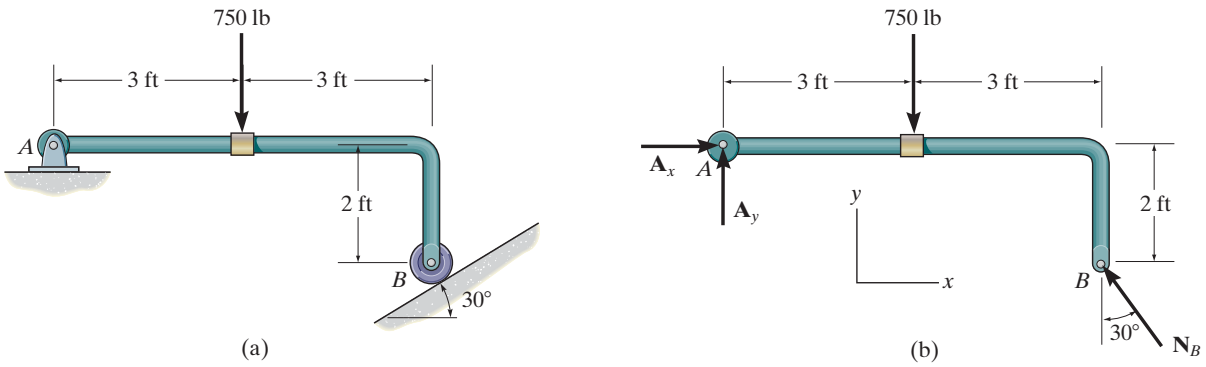

Fig. 5–16

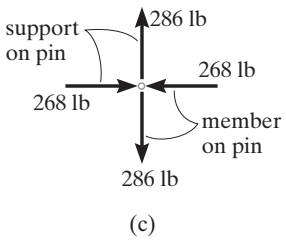

Equations of Equilibrium. The reaction N_B can be obtained *directly* by summing moments about point A, since $\mathbf{A}_x$ and $\mathbf{A}_y$ produce no moment about A.

$$\circlearrowleft + \Sigma M_A = 0;$$

$$[N_B \cos 30°](6 \text{ ft}) - [N_B \sin 30°](2 \text{ ft}) - 750 \text{ lb}(3 \text{ ft}) = 0$$

$$N_B = 536.2 \text{ lb} = 536 \text{ lb} \qquad \textit{Ans.}$$

Using this result,

$$\overset{+}{\rightarrow} \Sigma F_x = 0; \qquad A_x - (536.2 \text{ lb}) \sin 30° = 0$$

$$A_x = 268 \text{ lb} \qquad \textit{Ans.}$$

$$+\uparrow \Sigma F_y = 0; \qquad A_y + (536.2 \text{ lb}) \cos 30° - 750 \text{ lb} = 0$$

$$A_y = 286 \text{ lb} \qquad \textit{Ans.}$$

Details of the equilibrium of the pin at A are shown in Fig. 5–16c.

EXAMPLE 5.10

The uniform smooth rod shown in Fig. 5–17*a* is subjected to a force and couple moment. If the rod is supported at *A* by a smooth wall and at *B* and *C* either at the top or bottom by rollers, determine the reactions at these supports. Neglect the weight of the rod.

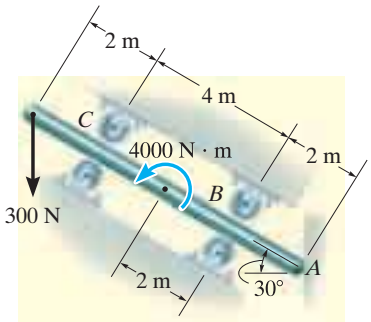

(a)

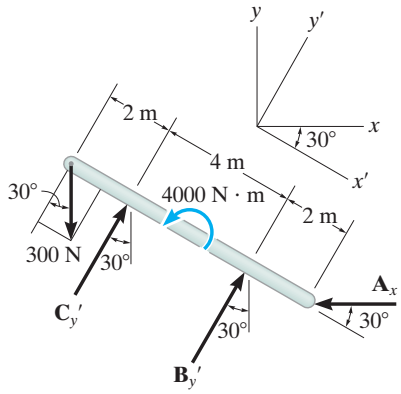

(b)

Fig. 5–17

SOLUTION

Free-Body Diagram. Removing the supports as shown in Fig. 5–17*b*, all the reactions act normal to the surfaces of contact since these surfaces are smooth. The reactions at *B* and *C* are shown acting in the positive y' direction. This assumes that only the rollers located on the bottom of the rod are used for support.

Equations of Equilibrium. Using the x, y coordinate system in Fig. 5–17*b*, we have

$$\overset{+}{\rightarrow} \Sigma F_x = 0; \qquad C_{y'} \sin 30° + B_{y'} \sin 30° - A_x = 0 \qquad (1)$$

$$+\uparrow \Sigma F_y = 0; \qquad -300 \text{ N} + C_{y'} \cos 30° + B_{y'} \cos 30° = 0 \qquad (2)$$

$$\circlearrowleft + \Sigma M_A = 0; \qquad -B_{y'}(2 \text{ m}) + 4000 \text{ N}\cdot\text{m} - C_{y'}(6 \text{ m}) + (300 \cos 30° \text{ N})(8 \text{ m}) = 0 \qquad (3)$$

When writing the moment equation, it should be noted that the line of action of the force component 300 sin 30° N passes through point *A*, and therefore this force is not included in the moment equation.

Solving Eqs. 2 and 3 simultaneously, we obtain

$$B_{y'} = -1000.0 \text{ N} = -1 \text{ kN} \qquad \textit{Ans.}$$

$$C_{y'} = 1346.4 \text{ N} = 1.35 \text{ kN} \qquad \textit{Ans.}$$

Since $B_{y'}$ is a negative scalar, the sense of $\mathbf{B}_{y'}$ is opposite to that shown on the free-body diagram in Fig. 5–17*b*. Therefore, the top roller at *B* serves as the support rather than the bottom one. Retaining the negative sign for $B_{y'}$ (Why?) and substituting the results into Eq. 1, we obtain

$$1346.4 \sin 30° \text{ N} + (-1000.0 \sin 30° \text{ N}) - A_x = 0$$

$$A_x = 173 \text{ N} \qquad \textit{Ans.}$$

EXAMPLE 5.11

(a)

(© Russell C. Hibbeler)

The uniform truck ramp shown in Fig. 5–18*a* has a weight of 400 lb and is pinned to the body of the truck at each side and held in the position shown by the two side cables. Determine the tension in the cables.

SOLUTION

The idealized model of the ramp, which indicates all necessary dimensions and supports, is shown in Fig. 5–18*b*. Here the center of gravity is located at the midpoint since the ramp is considered to be uniform.

Free-Body Diagram. Removing the supports from the idealized model, the ramp's free-body diagram is shown in Fig. 5–18*c*.

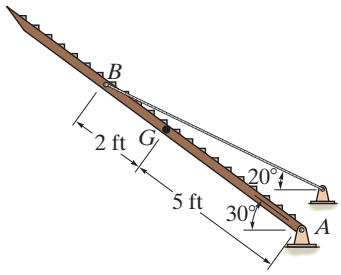

(b)

Equations of Equilibrium. Summing moments about point A will yield a direct solution for the cable tension. Using the principle of moments, there are several ways of determining the moment of **T** about A. If we use x and y components, with **T** applied at B, we have

$$\circlearrowleft + \Sigma M_A = 0; \qquad -T\cos 20°(7\sin 30°\text{ ft}) + T\sin 20°(7\cos 30°\text{ ft})$$

$$+ 400\text{ lb}\,(5\cos 30°\text{ ft}) = 0$$

$$T = 1425\text{ lb}$$

We can also determine the moment of **T** about A by resolving it into components along and perpendicular to the ramp at B. Then the moment of the component along the ramp will be zero about A, so that

$$\circlearrowleft + \Sigma M_A = 0; \qquad -T\sin 10°(7\text{ ft}) + 400\text{ lb}\,(5\cos 30°\text{ ft}) = 0$$

$$T = 1425\text{ lb}$$

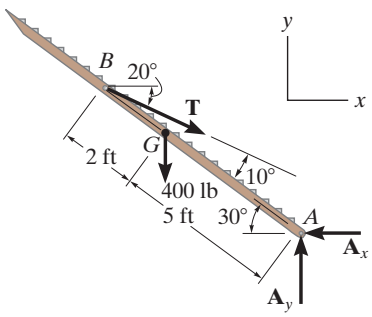

(c)

Fig. 5–18

Since there are two cables supporting the ramp,

$$T' = \frac{T}{2} = 712\text{ lb} \qquad \textit{Ans.}$$

NOTE: As an exercise, show that $A_x = 1339$ lb and $A_y = 887$ lb.

EXAMPLE 5.12

Determine the support reactions on the member in Fig. 5–19*a*. The collar at A is fixed to the member and can slide vertically along the vertical shaft.

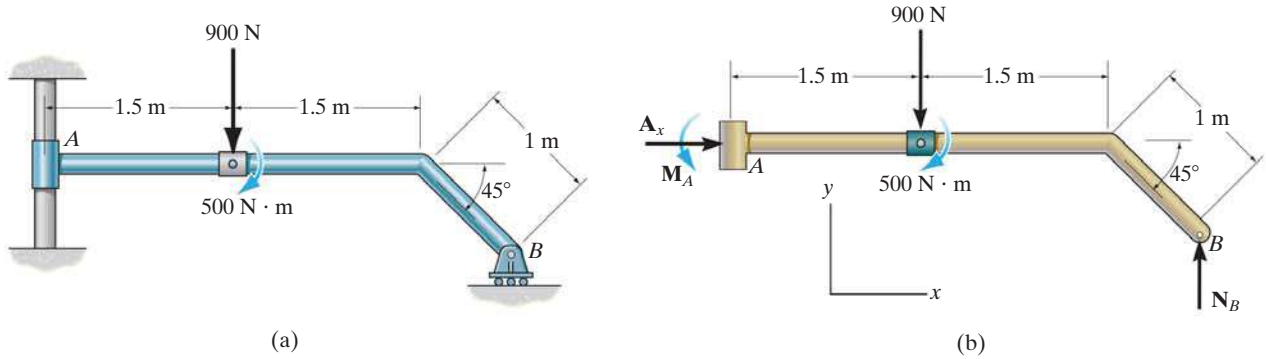

Fig. 5–19

SOLUTION

Free-Body Diagram. Removing the supports, the free-body diagram of the member is shown in Fig. 5–19*b*. The collar exerts a horizontal force $\mathbf{A}_x$ and moment $\mathbf{M}_A$ on the member. The reaction $\mathbf{N}_B$ of the roller on the member is vertical.

Equations of Equilibrium. The forces A_x and N_B can be determined directly from the force equations of equilibrium.

$$\overset{+}{\rightarrow} \Sigma F_x = 0; \qquad A_x = 0 \qquad \textit{Ans.}$$

$$+\uparrow \Sigma F_y = 0; \qquad N_B - 900\text{ N} = 0$$

$$N_B = 900\text{ N} \qquad \textit{Ans.}$$

The moment M_A can be determined by summing moments either about point A or point B.

$$\circlearrowleft + \Sigma M_A = 0;$$

$$M_A - 900\text{ N}(1.5\text{ m}) - 500\text{ N}\cdot\text{m} + 900\text{ N}\,[3\text{ m} + (1\text{ m})\cos 45°] = 0$$

$$M_A = -1486\text{ N}\cdot\text{m} = 1.49\text{ kN}\cdot\text{m}\circlearrowright \qquad \textit{Ans.}$$

or

$$\circlearrowleft + \Sigma M_B = 0; \quad M_A + 900\text{ N}\,[1.5\text{ m} + (1\text{ m})\cos 45°] - 500\text{ N}\cdot\text{m} = 0$$

$$M_A = -1486\text{ N}\cdot\text{m} = 1.49\text{ kN}\cdot\text{m}\circlearrowright \qquad \textit{Ans.}$$

The negative sign indicates that $\mathbf{M}_A$ has the opposite sense of rotation to that shown on the free-body diagram.

6.4 The Method of Sections

When we need to find the force in only a few members of a truss, we can analyze the truss using the ***method of sections***. It is based on the principle that if the truss is in equilibrium then any segment of the truss is also in equilibrium. For example, consider the two truss members shown on the left in Fig. 6–14. If the forces within the members are to be determined, then an imaginary section, indicated by the blue line, can be used to cut each member into two parts and thereby "expose" each internal force as "external" to the free-body diagrams shown on the right. Clearly, it can be seen that equilibrium requires that the member in tension (T) be subjected to a "pull," whereas the member in compression (C) is subjected to a "push."

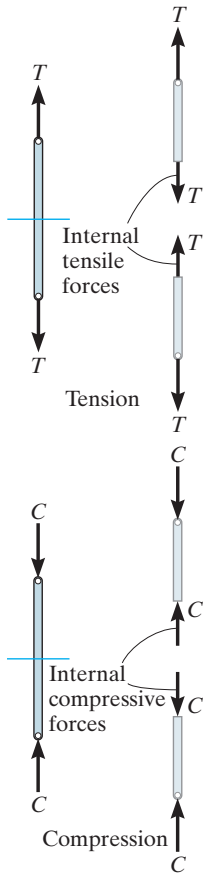

Fig. 6–14

The method of sections can also be used to "cut" or section the members of an entire truss. If the section passes through the truss and the free-body diagram of either of its two parts is drawn, we can then apply the equations of equilibrium to that part to determine the member forces at the "cut section." Since only *three* independent equilibrium equations ($\Sigma F_x = 0$, $\Sigma F_y = 0$, $\Sigma M_O = 0$) can be applied to the free-body diagram of any segment, then we should try to select a section that, in general, passes through not more than *three* members in which the forces are unknown. For example, consider the truss in Fig. 6–15*a*. If the forces in members *BC*, *GC*, and *GF* are to be determined, then section *aa* would be appropriate. The free-body diagrams of the two segments are shown in Figs. 6–15*b* and 6–15*c*. Note that the line of action of each member force is specified from the *geometry* of the truss, since the force in a member is along its axis. Also, the member forces acting on one part of the truss are equal but opposite to those acting on the other part—Newton's third law. Members *BC* and *GC* are assumed to be in *tension* since they are subjected to a "pull," whereas *GF* in *compression* since it is subjected to a "push."

The three unknown member forces $\mathbf{F}_{BC}$, $\mathbf{F}_{GC}$, and $\mathbf{F}_{GF}$ can be obtained by applying the three equilibrium equations to the free-body diagram in Fig. 6–15*b*. If, however, the free-body diagram in Fig. 6–15*c* is considered, the three support reactions $\mathbf{D}_x$, $\mathbf{D}_y$ and $\mathbf{E}_x$ will have to be known, because only three equations of equilibrium are available. (This, of course, is done in the usual manner by considering a free-body diagram of the *entire truss*.)

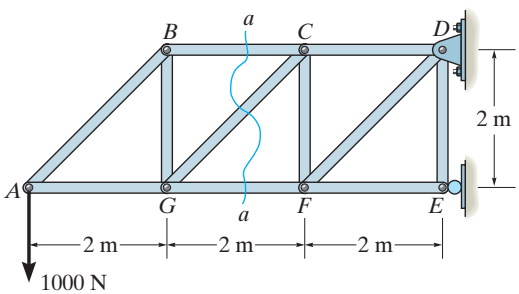

Fig. 6–15

The forces in selected members of this Pratt truss can readily be determined using the method of sections. (© Russell C. Hibbeler)

When applying the equilibrium equations, we should carefully consider ways of writing the equations so as to yield a *direct solution* for each of the unknowns, rather than having to solve simultaneous equations. For example, using the truss segment in Fig. 6–15*b* and summing moments about C would yield a direct solution for $\mathbf{F}_{GF}$ since $\mathbf{F}_{BC}$ and $\mathbf{F}_{GC}$ create zero moment about C. Likewise, $\mathbf{F}_{BC}$ can be directly obtained by summing moments about G. Finally, $\mathbf{F}_{GC}$ can be found directly from a force summation in the vertical direction since $\mathbf{F}_{GF}$ and $\mathbf{F}_{BC}$ have no vertical components. This ability to *determine directly* the force in a particular truss member is one of the main advantages of using the method of sections.*

As in the method of joints, there are two ways in which we can determine the correct sense of an unknown member force:

- The correct sense of an unknown member force can in many cases be determined "by inspection." For example, $\mathbf{F}_{BC}$ is a tensile force as represented in Fig. 6–15*b* since moment equilibrium about G requires that $\mathbf{F}_{BC}$ create a moment opposite to that of the 1000-N force. Also, $\mathbf{F}_{GC}$ is tensile since its vertical component must balance the 1000-N force which acts downward. In more complicated cases, the sense of an unknown member force may be *assumed.* If the solution yields a *negative* scalar, it indicates that the force's sense is *opposite* to that shown on the free-body diagram.
- *Always assume* that the unknown member forces at the cut section are *tensile* forces, i.e., "pulling" on the member. By doing this, the numerical solution of the equilibrium equations will yield *positive scalars for members in tension and negative scalars for members in compression.*

*Notice that if the method of joints were used to determine, say, the force in member GC, it would be necessary to analyze joints A, B, and G in sequence.

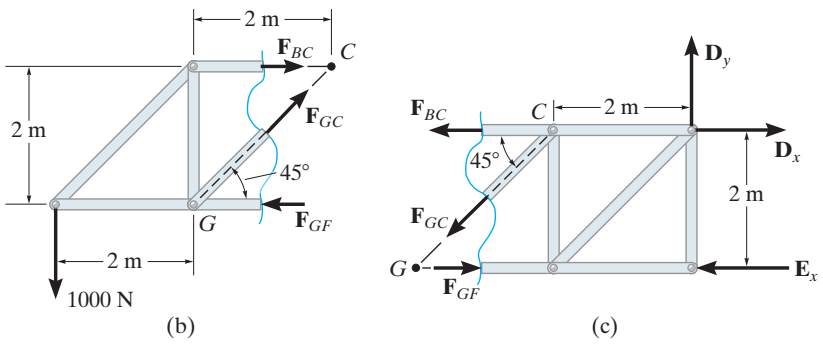

Fig. 6–15 (cont.)

Important Point

- If a truss is in equilibrium, then each of its segments is in equilibrium. The internal forces in the members become external forces when the free-body diagram of a segment of the truss is drawn. A force pulling on a member causes tension in the member, and a force pushing on a member causes compression.

Simple trusses are often used in the construction of large cranes in order to reduce the weight of the boom and tower. (© Russell C. Hibbeler)

Procedure for Analysis

The forces in the members of a truss may be determined by the method of sections using the following procedure.

Free-Body Diagram.

- Make a decision on how to "cut" or section the truss through the members where forces are to be determined.
- Before isolating the appropriate section, it may first be necessary to determine the truss's support reactions. If this is done then the three equilibrium equations will be available to solve for member forces at the section.
- Draw the free-body diagram of that segment of the sectioned truss which has the least number of forces acting on it.
- Use one of the two methods described above for establishing the sense of the unknown member forces.

Equations of Equilibrium.

- Moments should be summed about a point that lies at the intersection of the lines of action of two unknown forces, so that the third unknown force can be determined directly from the moment equation.
- If two of the unknown forces are *parallel*, forces may be summed *perpendicular* to the direction of these unknowns to determine *directly* the third unknown force.

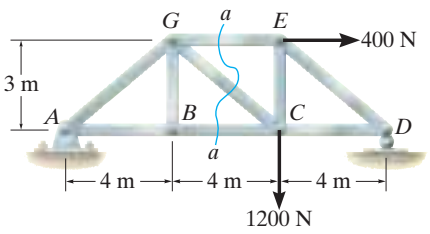

(a)

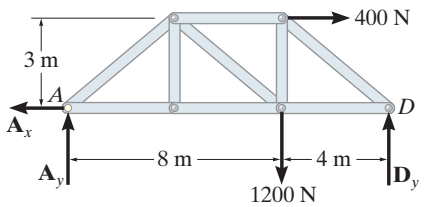

(b)

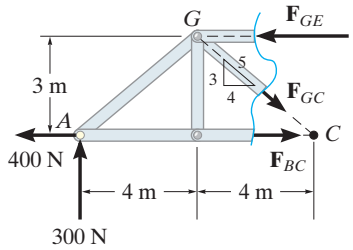

(c)

Fig. 6–16

Determine the force in members GE, GC, and BC of the truss shown in Fig. 6–16*a*. Indicate whether the members are in tension or compression.

SOLUTION

Section *aa* in Fig. 6–16*a* has been chosen since it cuts through the *three* members whose forces are to be determined. In order to use the method of sections, however, it is *first* necessary to determine the external reactions at A or D. Why? A free-body diagram of the entire truss is shown in Fig. 6–16*b*. Applying the equations of equilibrium, we have

$$\overset{+}{\rightarrow}\Sigma F_x = 0; \qquad 400\text{ N} - A_x = 0 \qquad A_x = 400\text{ N}$$

$$\circlearrowleft + \Sigma M_A = 0; \qquad -1200\text{ N}(8\text{ m}) - 400\text{ N}(3\text{ m}) + D_y(12\text{ m}) = 0$$

$$D_y = 900\text{ N}$$

$$+\uparrow \Sigma F_y = 0; \qquad A_y - 1200\text{ N} + 900\text{ N} = 0 \qquad A_y = 300\text{ N}$$

Free-Body Diagram. For the analysis the free-body diagram of the left portion of the sectioned truss will be used, since it involves the least number of forces, Fig. 6–16*c*.

Equations of Equilibrium. Summing moments about point G eliminates $\mathbf{F}_{GE}$ and $\mathbf{F}_{GC}$ and yields a direct solution for F_{BC}.

$$\circlearrowleft + \Sigma M_G = 0; \quad -300\text{ N}(4\text{ m}) - 400\text{ N}(3\text{ m}) + F_{BC}(3\text{ m}) = 0$$

$$F_{BC} = 800\text{ N} \quad \text{(T)} \qquad \textit{Ans.}$$

In the same manner, by summing moments about point C we obtain a direct solution for F_{GE}.

$$\circlearrowleft + \Sigma M_C = 0; \quad -300\text{ N}(8\text{ m}) + F_{GE}(3\text{ m}) = 0$$

$$F_{GE} = 800\text{ N} \quad \text{(C)} \qquad \textit{Ans.}$$

Since $\mathbf{F}_{BC}$ and $\mathbf{F}_{GE}$ have no vertical components, summing forces in the y direction directly yields F_{GC}, i.e.,

$$+\uparrow \Sigma F_y = 0; \qquad 300\text{ N} - \tfrac{3}{5}F_{GC} = 0$$

$$F_{GC} = 500\text{ N} \quad \text{(T)} \qquad \textit{Ans.}$$

NOTE: Here it is possible to tell, by inspection, the proper direction for each unknown member force. For example, $\Sigma M_C = 0$ requires $\mathbf{F}_{GE}$ to be *compressive* because it must balance the moment of the 300-N force about C.

EXAMPLE 6.6

Determine the force in member CF of the truss shown in Fig. 6–17a. Indicate whether the member is in tension or compression. Assume each member is pin connected.

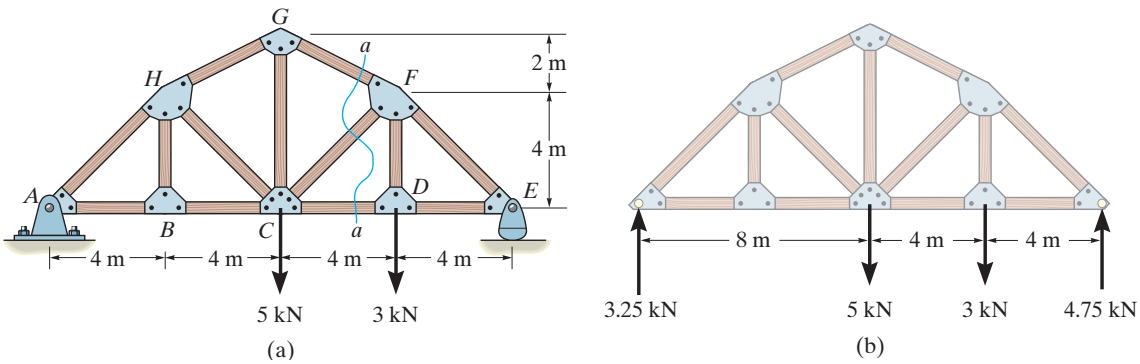

Fig. 6–17

SOLUTION

Free-Body Diagram. Section aa in Fig. 6–17a will be used since this section will "expose" the internal force in member CF as "external" on the free-body diagram of either the right or left portion of the truss. It is first necessary, however, to determine the support reactions on either the left or right side. Verify the results shown on the free-body diagram in Fig. 6–17b.

The free-body diagram of the right portion of the truss, which is the easiest to analyze, is shown in Fig. 6–17c. There are three unknowns, F_{FG}, F_{CF}, and F_{CD}.

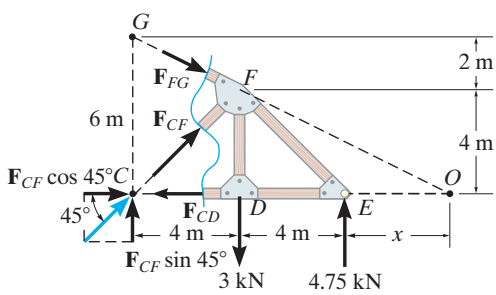

(c)

Equations of Equilibrium. We will apply the moment equation about point O in order to eliminate the two unknowns F_{FG} and F_{CD}. The location of point O measured from E can be determined from proportional triangles, i.e., $4/(4 + x) = 6/(8 + x)$, $x = 4$ m. Or, stated in another manner, the slope of member GF has a drop of 2 m to a horizontal distance of 4 m. Since FD is 4 m, Fig. 6–17c, then from D to O the distance must be 8 m.

An easy way to determine the moment of $\mathbf{F}_{CF}$ about point O is to use the principle of transmissibility and slide $\mathbf{F}_{CF}$ to point C, and then resolve $\mathbf{F}_{CF}$ into its two rectangular components. We have

$$\circlearrowleft + \Sigma M_O = 0;$$

$$-F_{CF} \sin 45°(12 \text{ m}) + (3 \text{ kN})(8 \text{ m}) - (4.75 \text{ kN})(4 \text{ m}) = 0$$

$$F_{CF} = 0.589 \text{ kN} \quad \text{(C)} \qquad \textit{Ans.}$$

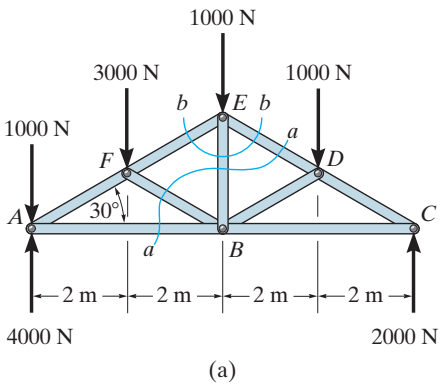

Determine the force in member EB of the roof truss shown in Fig. 6–18a. Indicate whether the member is in tension or compression.

SOLUTION

Free-Body Diagrams. By the method of sections, any imaginary section that cuts through EB, Fig. 6–18a, will also have to cut through three other members for which the forces are unknown. For example, section aa cuts through ED, EB, FB, and AB. If a free-body diagram of the left side of this section is considered, Fig. 6–18b, it is possible to obtain $\mathbf{F}_{ED}$ by summing moments about B to eliminate the other three unknowns; however, $\mathbf{F}_{EB}$ cannot be determined from the remaining two equilibrium equations. One possible way of obtaining $\mathbf{F}_{EB}$ is first to determine $\mathbf{F}_{ED}$ from section aa, then use this result on section bb, Fig. 6–18a, which is shown in Fig. 6–18c. Here the force system is concurrent and our sectioned free-body diagram is the same as the free-body diagram for the joint at E.

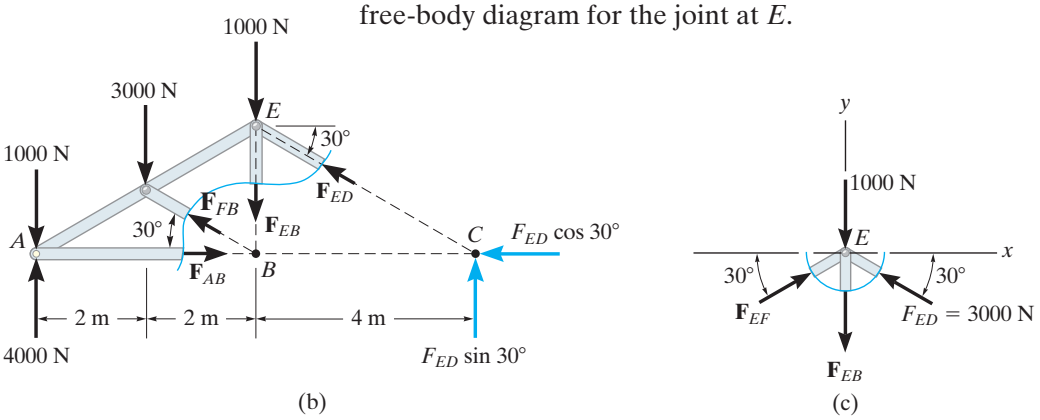

Fig. 6–18

Equations of Equilibrium. In order to determine the moment of $\mathbf{F}_{ED}$ about point B, Fig. 6–18b, we will use the principle of transmissibility and slide the force to point C and then resolve it into its rectangular components as shown. Therefore,

$$\circlearrowleft + \Sigma M_B = 0; \qquad 1000\text{ N}(4\text{ m}) + 3000\text{ N}(2\text{ m}) - 4000\text{ N}(4\text{ m}) + F_{ED}\sin 30°(4\text{ m}) = 0$$

$$F_{ED} = 3000\text{ N} \quad (\text{C})$$

Considering now the free-body diagram of section bb, Fig. 6–18c, we have

$$\overset{+}{\rightarrow} \Sigma F_x = 0; \qquad F_{EF}\cos 30° - 3000\cos 30°\text{ N} = 0$$

$$F_{EF} = 3000\text{ N} \quad (\text{C})$$

$$+\uparrow \Sigma F_y = 0; \qquad 2(3000\sin 30°\text{ N}) - 1000\text{ N} - F_{EB} = 0$$

$$F_{EB} = 2000\text{ N} \quad (\text{T}) \qquad \textit{Ans.}$$

FUNDAMENTAL PROBLEMS

All problem solutions must include FBDs.

F6–7. Determine the force in members *BC*, *CF*, and *FE*. State if the members are in tension or compression.

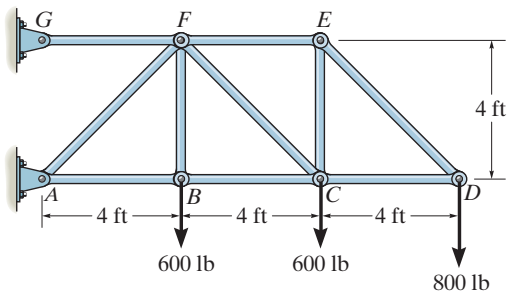

Prob. F6–7

F6–8. Determine the force in members *LK*, *KC*, and *CD* of the Pratt truss. State if the members are in tension or compression.

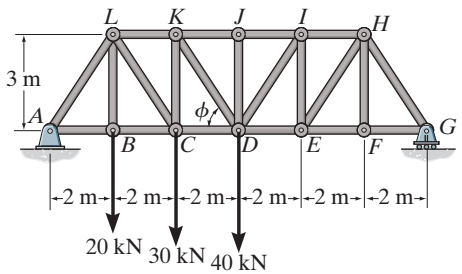

Prob. F6–8

F6–9. Determine the force in members *KJ*, *KD*, and *CD* of the Pratt truss. State if the members are in tension or compression.

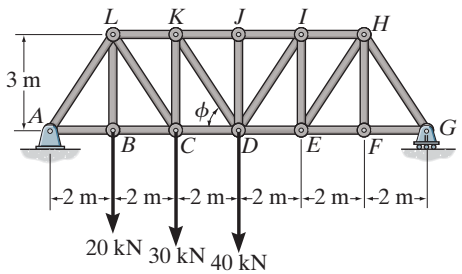

Prob. F6–9

F6–10. Determine the force in members *EF*, *CF*, and *BC* of the truss. State if the members are in tension or compression.

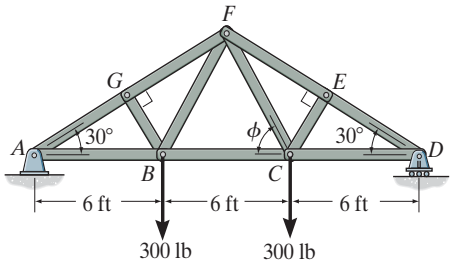

Prob. F6–10

F6–11. Determine the force in members *GF*, *GD*, and *CD* of the truss. State if the members are in tension or compression.

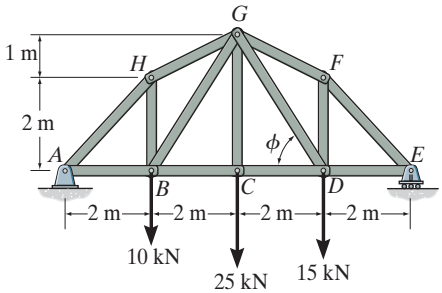

Prob. F6–11

F6–12. Determine the force in members *DC*, *HI*, and *JI* of the truss. State if the members are in tension or compression. *Suggestion:* Use the sections shown.

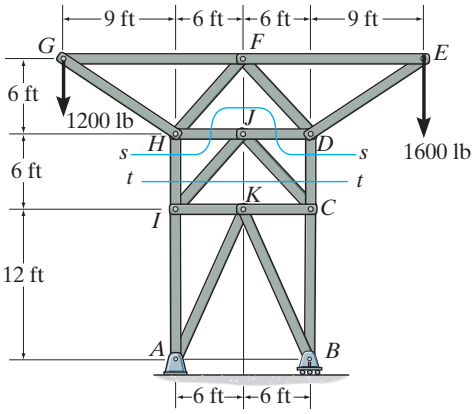

Prob. F6–12

PROBLEMS

All problem solutions must include FBDs.

6–27. Determine the force in members *DC*, *HC*, and *HI* of the truss, and state if the members are in tension or compression.

***6–28.** Determine the force in members *ED*, *EH*, and *GH* of the truss, and state if the members are in tension or compression.

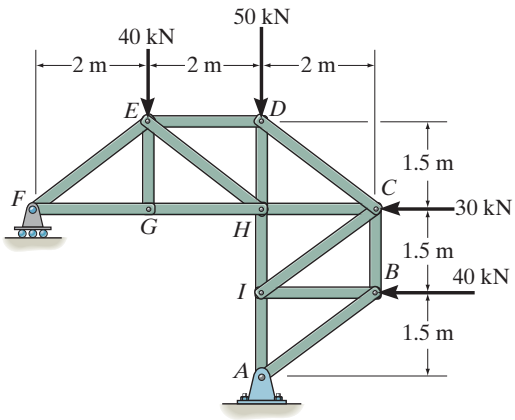

Probs. 6–27/28

6–29. Determine the force in members *HG*, *HE* and *DE* of the truss, and state if the members are in tension or compression.

6–30. Determine the force in members *CD*, *HI*, and *CH* of the truss, and state if the members are in tension or compression.

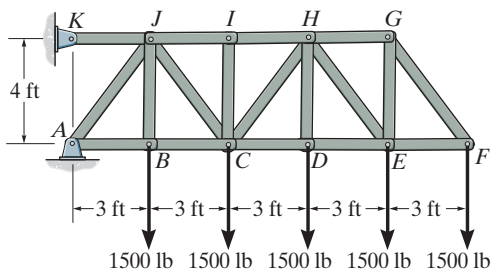

Probs. 6–29/30

6–31. Determine the force in members *CD*, *CJ*, *KJ*, and *DJ* of the truss which serves to support the deck of a bridge. State if these members are in tension or compression.

***6–32.** Determine the force in members *EI* and *JI* of the truss which serves to support the deck of a bridge. State if these members are in tension or compression.

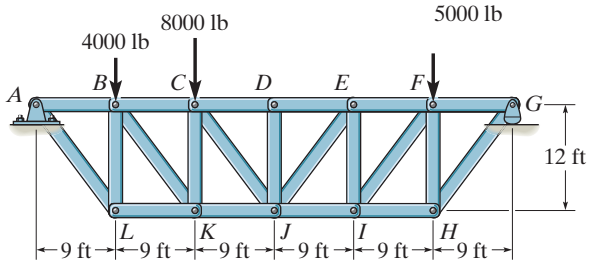

Probs. 6–31/32

6–33. The *Howe truss* is subjected to the loading shown. Determine the force in members *GF*, *CD*, and *GC*, and state if the members are in tension or compression.

6–34. The *Howe truss* is subjected to the loading shown. Determine the force in members *GH*, *BC*, and *BG* of the truss and state if the members are in tension or compression.

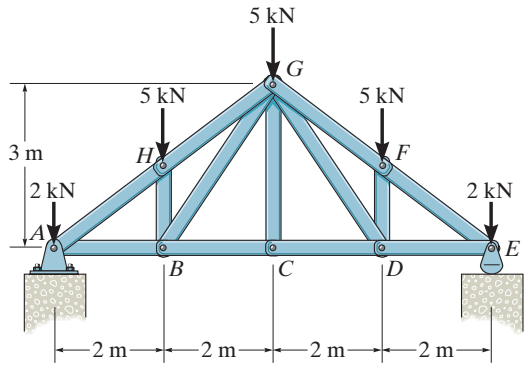

Probs. 6–33/34

6–35. Determine the force in members *EF*, *CF*, and *BC*, and state if the members are in tension or compression.

***6–36.** Determine the force in members *AF*, *BF*, and *BC*, and state if the members are in tension or compression.

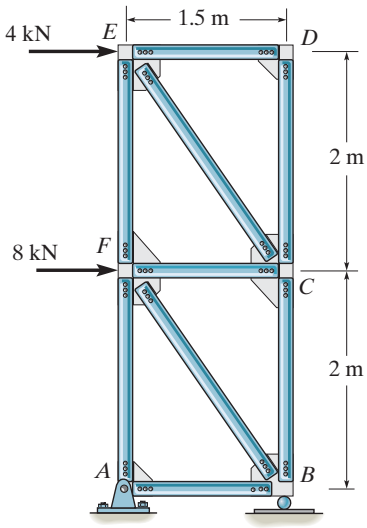

Probs. 6–35/36

6–37. Determine the force in members *EF*, *BE*, *BC* and *BF* of the truss and state if these members are in tension or compression. Set $P_1 = 9$ kN, $P_2 = 12$ kN, and $P_3 = 6$ kN.

6–38. Determine the force in members *BC*, *BE*, and *EF* of the truss and state if these members are in tension or compression. Set $P_1 = 6$ kN, $P_2 = 9$ kN, and $P_3 = 12$ kN.

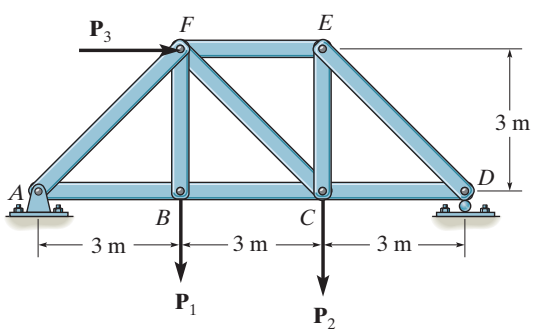

Probs. 6–37/38

6–39. Determine the force in members *BC*, *HC*, and *HG*. After the truss is sectioned use a single equation of equilibrium for the calculation of each force. State if these members are in tension or compression.

***6–40.** Determine the force in members *CD*, *CF*, and *CG* and state if these members are in tension or compression.

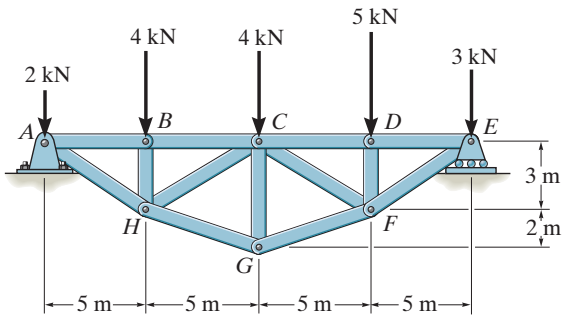

Probs. 6–39/40

6–41. Determine the force developed in members *FE*, *EB*, and *BC* of the truss and state if these members are in tension or compression.

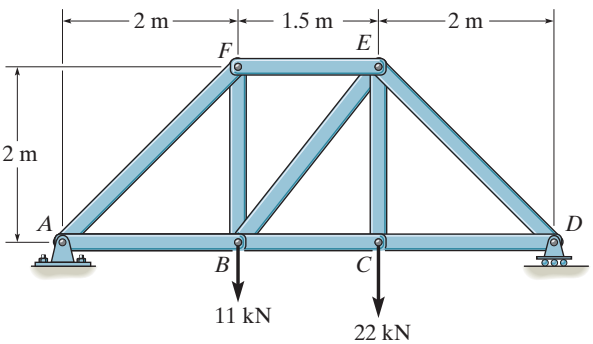

Prob. 6–41

6–42. Determine the force in members *BC*, *HC*, and *HG*. State if these members are in tension or compression.

6–43. Determine the force in members *CD*, *CJ*, *GJ*, and *CG* and state if these members are in tension or compression.

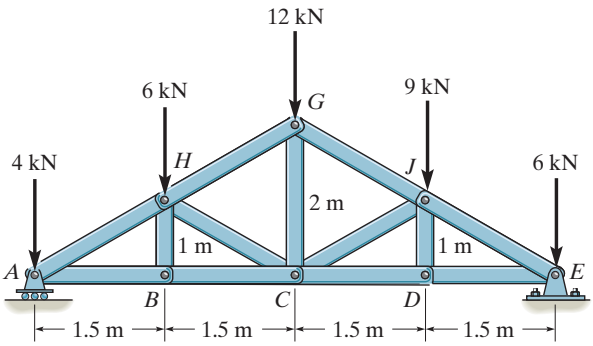

Probs. 6–42/43

***6–44.** Determine the force in members *BE*, *EF*, and *CB*, and state if the members are in tension or compression.

6–45. Determine the force in members *BF*, *BG*, and *AB*, and state if the members are in tension or compression.

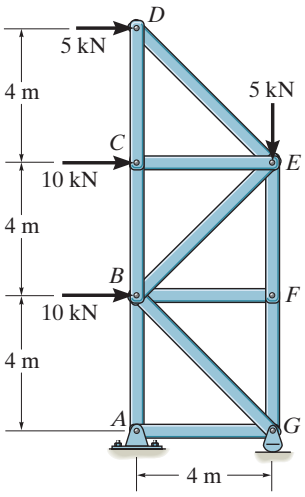

Probs. 6–44/45

6–46. Determine the force in members *BC*, *CH*, *GH*, and *CG* of the truss and state if the members are in tension or compression.

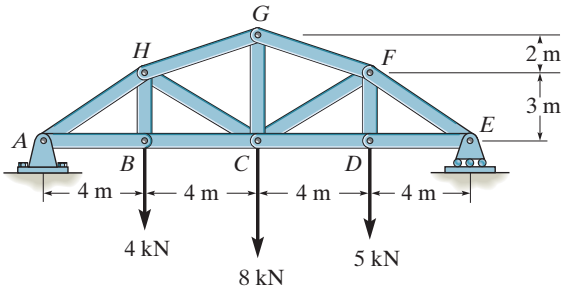

Prob. 6–46

6–47. Determine the force in members *CD*, *CJ*, and *KJ* and state if these members are in tension or compression.

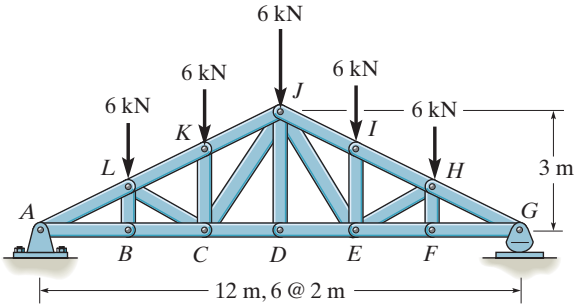

Prob. 6–47

***6–48.** Determine the force in members *JK*, *CJ*, and *CD* of the truss, and state if the members are in tension or compression.

6–49. Determine the force in members *HI*, *FI*, and *EF* of the truss, and state if the members are in tension or compression.

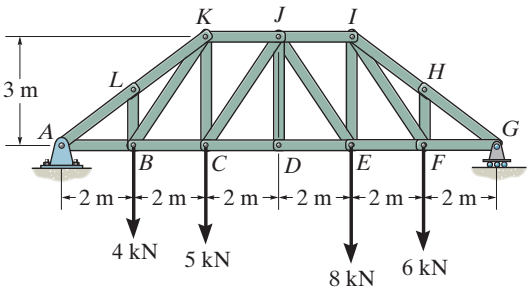

Probs. 6–48/49

Chapter 6

(© Tim Scrivener/Alamy)

In order to design the many parts of this boom assembly it is required that we know the forces that they must support. In this chapter we will show how to analyze such structures using the equations of equilibrium.

Structural Analysis

CHAPTER OBJECTIVES

- To show how to determine the forces in the members of a truss using the method of joints and the method of sections.
- To analyze the forces acting on the members of frames and machines composed of pin-connected members.

6.1 Simple Trusses

A ***truss*** is a structure composed of slender members joined together at their end points. The members commonly used in construction consist of wooden struts or metal bars. In particular, *planar* trusses lie in a single plane and are often used to support roofs and bridges. The truss shown in Fig. 6–1*a* is an example of a typical roof-supporting truss. In this figure, the roof load is transmitted to the truss *at the joints* by means of a series of *purlins*. Since this loading acts in the same plane as the truss, Fig. 6–1*b*, the analysis of the forces developed in the truss members will be two-dimensional.

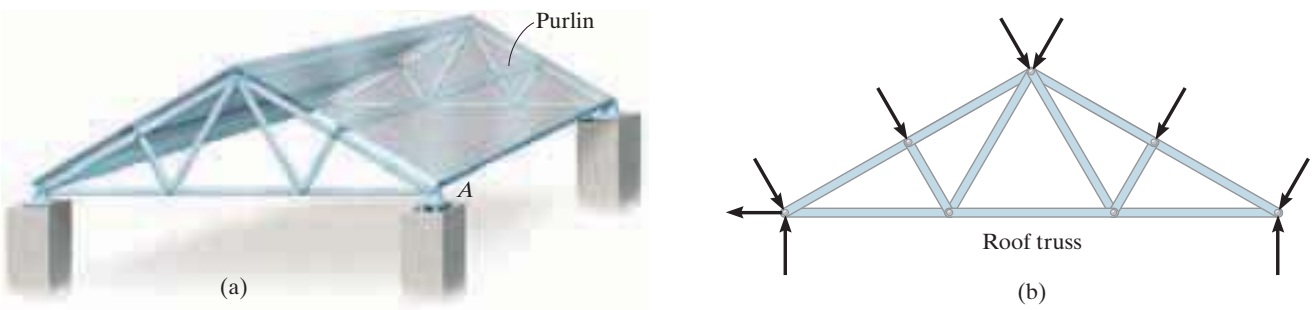

Fig. 6–1

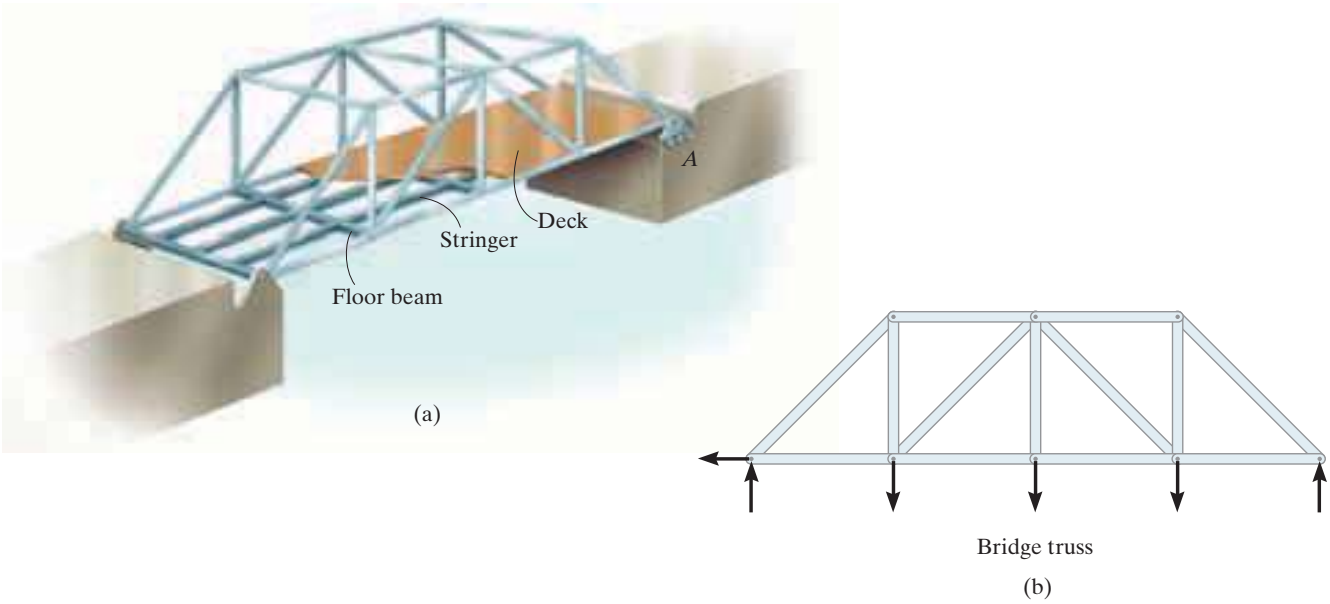

Fig. 6–2

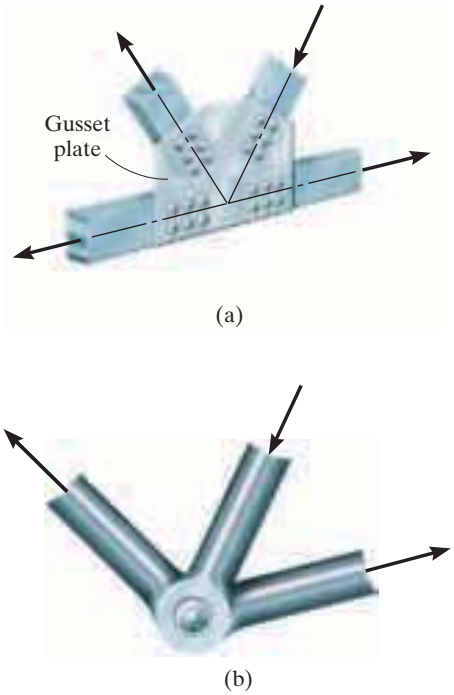

Fig. 6–3

In the case of a bridge, such as shown in Fig. 6–2*a*, the load on the deck is first transmitted to *stringers*, then to *floor beams*, and finally to the *joints* of the two supporting side trusses. Like the roof truss, the bridge truss loading is also coplanar, Fig. 6–2*b*.

When bridge or roof trusses extend over large distances, a rocker or roller is commonly used for supporting one end, for example, joint *A* in Figs. 6–1*a* and 6–2*a*. This type of support allows freedom for expansion or contraction of the members due to a change in temperature or application of loads.

Assumptions for Design. To design both the members and the connections of a truss, it is necessary first to determine the *force* developed in each member when the truss is subjected to a given loading. To do this we will make two important assumptions:

- ***All loadings are applied at the joints.*** In most situations, such as for bridge and roof trusses, this assumption is true. Frequently the weight of the members is neglected because the force supported by each member is usually much larger than its weight. However, if the weight is to be included in the analysis, it is generally satisfactory to apply it as a vertical force, with half of its magnitude applied at each end of the member.
- ***The members are joined together by smooth pins.*** The joint connections are usually formed by bolting or welding the ends of the members to a common plate, called a *gusset plate*, as shown in Fig. 6–3*a*, or by simply passing a large bolt or pin through each of the members, Fig. 6–3*b*. We can assume these connections act as pins provided the center lines of the joining members are *concurrent*, as in Fig. 6–3.

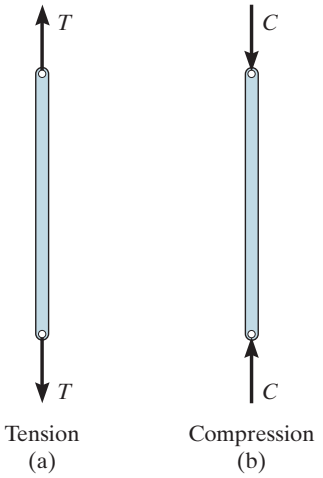

Fig. 6–4

Because of these two assumptions, *each truss member will act as a two-force member*, and therefore the force acting at each end of the member will be directed along the axis of the member. If the force tends to *elongate* the member, it is a ***tensile force*** (T), Fig. 6–4*a*; whereas if it tends to *shorten* the member, it is a ***compressive force*** (C), Fig. 6–4*b*. In the actual design of a truss it is important to state whether the nature of the force is tensile or compressive. Often, compression members must be made *thicker* than tension members because of the buckling or column effect that occurs when a member is in compression.

The use of metal gusset plates in the construction of these Warren trusses is clearly evident. (© Russell C. Hibbeler)

Simple Truss. If three members are pin connected at their ends, they form a *triangular truss* that will be *rigid*, Fig. 6–5. Attaching two more members and connecting these members to a new joint *D* forms a larger truss, Fig. 6–6. This procedure can be repeated as many times as desired to form an even larger truss. If a truss can be constructed by expanding the basic triangular truss in this way, it is called a ***simple truss***.

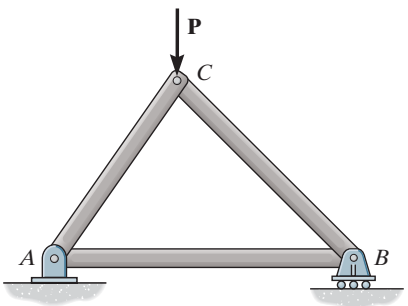

Fig. 6–5

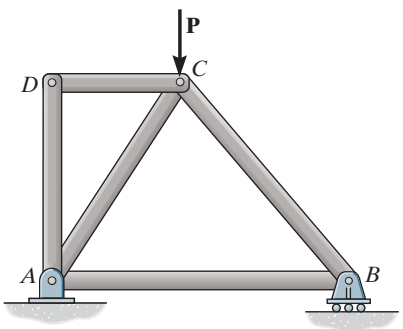

Fig. 6–6

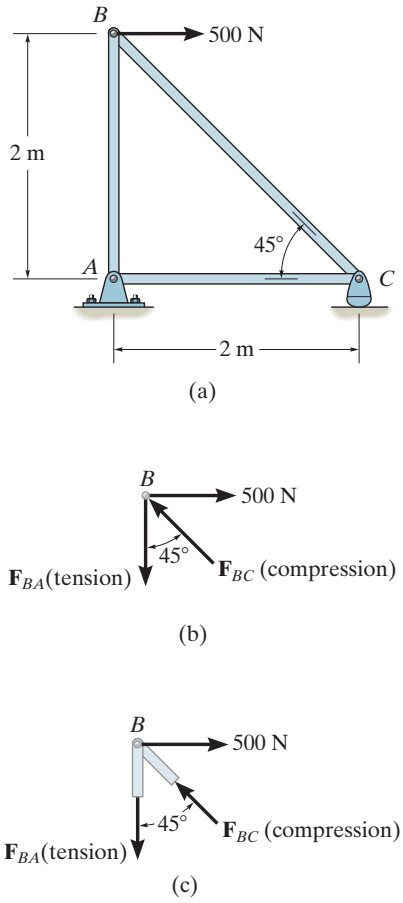

Fig. 6–7

The forces in the members of this simple roof truss can be determined using the method of joints. (© Russell C. Hibbeler)

6.2 The Method of Joints

In order to analyze or design a truss, it is necessary to determine the force in each of its members. One way to do this is to use the ***method of joints***. This method is based on the fact that if the entire truss is in equilibrium, then each of its joints is also in equilibrium. Therefore, if the free-body diagram of each joint is drawn, the force equilibrium equations can then be used to obtain the member forces acting on each joint. Since the members of a *plane truss* are straight two-force members lying in a single plane, each joint is subjected to a force system that is *coplanar and concurrent*. As a result, only $\Sigma F_x = 0$ and $\Sigma F_y = 0$ need to be satisfied for equilibrium.

For example, consider the pin at joint B of the truss in Fig. 6–7*a*. Three forces act on the pin, namely, the 500-N force and the forces exerted by members BA and BC. The free-body diagram of the pin is shown in Fig. 6–7*b*. Here, $\mathbf{F}_{BA}$ is "pulling" on the pin, which means that member BA is in *tension;* whereas $\mathbf{F}_{BC}$ is "pushing" on the pin, and consequently member BC is in *compression.* These effects are clearly demonstrated by isolating the joint with small segments of the member connected to the pin, Fig. 6–7*c*. The pushing or pulling on these small segments indicates the effect of the member being either in compression or tension.

When using the method of joints, always start at a joint having at least one known force and at most two unknown forces, as in Fig. 6–7*b*. In this way, application of $\Sigma F_x = 0$ and $\Sigma F_y = 0$ yields two algebraic equations which can be solved for the two unknowns. When applying these equations, the correct sense of an unknown member force can be determined using one of two possible methods.

- The *correct* sense of direction of an unknown member force can, in many cases, be determined "by inspection." For example, $\mathbf{F}_{BC}$ in Fig. 6–7*b* must push on the pin (compression) since its horizontal component, $F_{BC} \sin 45°$, must balance the 500-N force ($\Sigma F_x = 0$). Likewise, $\mathbf{F}_{BA}$ is a tensile force since it balances the vertical component, $F_{BC} \cos 45°$ ($\Sigma F_y = 0$). In more complicated cases, the sense of an unknown member force can be *assumed*; then, after applying the equilibrium equations, the assumed sense can be verified from the numerical results. A *positive* answer indicates that the sense is *correct*, whereas a *negative* answer indicates that the sense shown on the free-body diagram must be *reversed.*
- *Always assume* the *unknown member forces* acting on the joint's free-body diagram to be in *tension*; i.e., the forces "pull" on the pin. If this is done, then numerical solution of the equilibrium equations will yield *positive scalars for members in tension and negative scalars for members in compression.* Once an unknown member force is found, use its *correct* magnitude and sense (T or C) on subsequent joint free-body diagrams.

Important Points

- Simple trusses are composed of triangular elements. The members are assumed to be pin connected at their ends and loads applied at the joints.
- If a truss is in equilibrium, then each of its joints is in equilibrium. The internal forces in the members become external forces when the free-body diagram of each joint of the truss is drawn. A force pulling on a joint is caused by tension in a member, and a force pushing on a joint is caused by compression.

Procedure for Analysis

The following procedure provides a means for analyzing a truss using the method of joints.

- Draw the free-body diagram of a joint having at least one known force and at most two unknown forces. (If this joint is at one of the supports, then it may be necessary first to calculate the external reactions at the support.)
- Use one of the two methods described above for establishing the sense of an unknown force.
- Orient the x and y axes such that the forces on the free-body diagram can be easily resolved into their x and y components and then apply the two force equilibrium equations $\Sigma F_x = 0$ and $\Sigma F_y = 0$. Solve for the two unknown member forces and verify their correct sense.
- Using the calculated results, continue to analyze each of the other joints. Remember that a member in *compression* "pushes" on the joint and a member in *tension* "pulls" on the joint. Also, be sure to choose a joint having at most two unknowns and at least one known force.

EXAMPLE 6.1

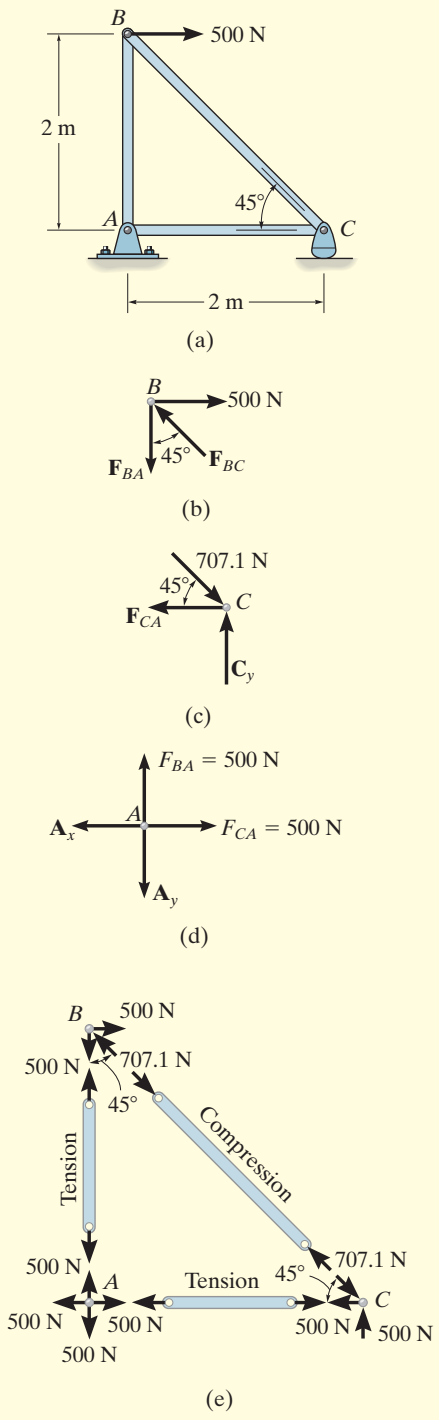

Fig. 6–8

Determine the force in each member of the truss shown in Fig. 6–8*a* and indicate whether the members are in tension or compression.

SOLUTION

Since we should have no more than two unknown forces at the joint and at least one known force acting there, we will begin our analysis at joint *B*.

Joint B. The free-body diagram of the joint at *B* is shown in Fig. 6–8*b*. Applying the equations of equilibrium, we have

$$\overset{+}{\rightarrow}\Sigma F_x = 0; \qquad 500\text{ N} - F_{BC}\sin 45° = 0 \qquad F_{BC} = 707.1\text{ N (C)} \qquad \textit{Ans.}$$
$$+\uparrow\Sigma F_y = 0; \qquad F_{BC}\cos 45° - F_{BA} = 0 \qquad F_{BA} = 500\text{ N (T)} \qquad \textit{Ans.}$$

Since the force in member *BC* has been calculated, we can proceed to analyze joint *C* to determine the force in member *CA* and the support reaction at the rocker.

Joint C. From the free-body diagram of joint *C*, Fig. 6–8*c*, we have

$$\overset{+}{\rightarrow}\Sigma F_x = 0; \quad -F_{CA} + 707.1\cos 45°\text{ N} = 0 \qquad F_{CA} = 500\text{ N (T)} \qquad \textit{Ans.}$$
$$+\uparrow\Sigma F_y = 0; \qquad C_y - 707.1\sin 45°\text{ N} = 0 \qquad C_y = 500\text{ N} \qquad \textit{Ans.}$$

Joint A. Although it is not necessary, we can determine the components of the support reactions at joint *A* using the results of F_{CA} and F_{BA}. From the free-body diagram, Fig. 6–8*d*, we have

$$\overset{+}{\rightarrow}\Sigma F_x = 0; \qquad 500\text{ N} - A_x = 0 \qquad A_x = 500\text{ N}$$
$$+\uparrow\Sigma F_y = 0; \qquad 500\text{ N} - A_y = 0 \qquad A_y = 500\text{ N}$$

NOTE: The results of the analysis are summarized in Fig. 6–8*e*. Note that the free-body diagram of each joint (or pin) shows the effects of all the connected members and external forces applied to the joint, whereas the free-body diagram of each member shows only the effects of the end joints on the member.

EXAMPLE 6.2

Determine the forces acting in all the members of the truss shown in Fig. 6–9*a*.

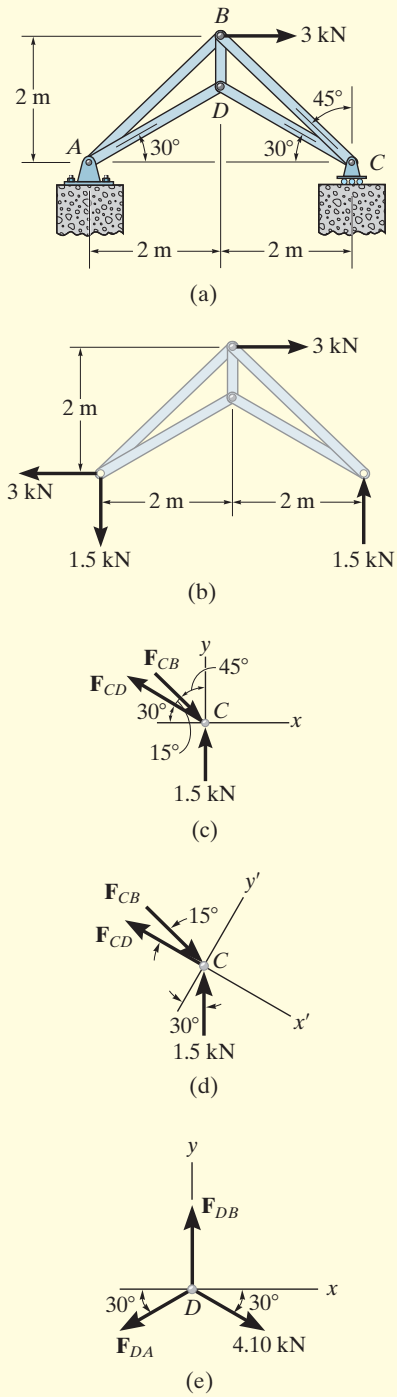

Fig. 6–9

SOLUTION

By inspection, there are more than two unknowns at each joint. Consequently, the support reactions on the truss must first be determined. Show that they have been correctly calculated on the free-body diagram in Fig. 6–9*b*. We can now begin the analysis at joint *C*. Why?

Joint C. From the free-body diagram, Fig. 6–9*c*,

$$\overset{+}{\rightarrow}\Sigma F_x = 0; \qquad -F_{CD}\cos 30° + F_{CB}\sin 45° = 0$$
$$+\uparrow\Sigma F_y = 0; \qquad 1.5\text{ kN} + F_{CD}\sin 30° - F_{CB}\cos 45° = 0$$

These two equations must be solved *simultaneously* for each of the two unknowns. Note, however, that a *direct solution* for one of the unknown forces may be obtained by applying a force summation along an axis that is *perpendicular* to the direction of the other unknown force. For example, summing forces along the y' axis, which is perpendicular to the direction of $\mathbf{F}_{CD}$, Fig. 6–9*d*, yields a *direct solution* for F_{CB}.

$$+\nearrow\Sigma F_{y'} = 0; \qquad 1.5\cos 30°\text{ kN} - F_{CB}\sin 15° = 0$$
$$F_{CB} = 5.019\text{ kN} = 5.02\text{ kN (C)} \qquad \textit{Ans.}$$

Then,

$$+\searrow\Sigma F_{x'} = 0;$$
$$-F_{CD} + 5.019\cos 15° - 1.5\sin 30° = 0; \qquad F_{CD} = 4.10\text{ kN (T)} \qquad \textit{Ans.}$$

Joint D. We can now proceed to analyze joint *D*. The free-body diagram is shown in Fig. 6–9*e*.

$$\overset{+}{\rightarrow}\Sigma F_x = 0; \qquad -F_{DA}\cos 30° + 4.10\cos 30°\text{ kN} = 0$$
$$F_{DA} = 4.10\text{ kN (T)} \qquad \textit{Ans.}$$

$$+\uparrow\Sigma F_y = 0; \qquad F_{DB} - 2(4.10\sin 30°\text{ kN}) = 0$$
$$F_{DB} = 4.10\text{ kN (T)} \qquad \textit{Ans.}$$

NOTE: The force in the last member, *BA*, can be obtained from joint *B* or joint *A*. As an exercise, draw the free-body diagram of joint *B*, sum the forces in the horizontal direction, and show that $F_{BA} = 0.776$ kN (C).

Determine the force in each member of the truss shown in Fig. 6–10*a*. Indicate whether the members are in tension or compression.

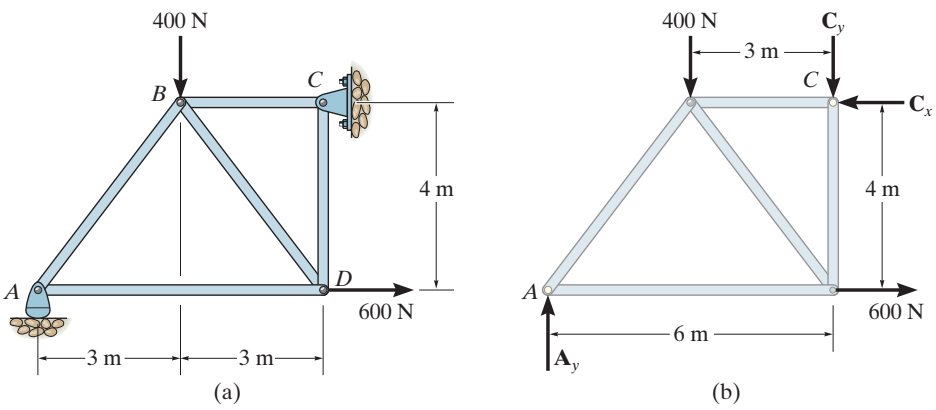

Fig. 6–10

SOLUTION

Support Reactions. No joint can be analyzed until the support reactions are determined, because each joint has at least three unknown forces acting on it. A free-body diagram of the entire truss is given in Fig. 6–10*b*. Applying the equations of equilibrium, we have

$$\overset{+}{\rightarrow}\Sigma F_x = 0; \qquad 600\text{ N} - C_x = 0 \qquad C_x = 600\text{ N}$$

$$\circlearrowleft + \Sigma M_C = 0; \qquad -A_y(6\text{ m}) + 400\text{ N}(3\text{ m}) + 600\text{ N}(4\text{ m}) = 0$$

$$A_y = 600\text{ N}$$

$$+\uparrow\Sigma F_y = 0; \qquad 600\text{ N} - 400\text{ N} - C_y = 0 \qquad C_y = 200\text{ N}$$

The analysis can now start at either joint *A* or *C*. The choice is arbitrary since there are one known and two unknown member forces acting on the pin at each of these joints.

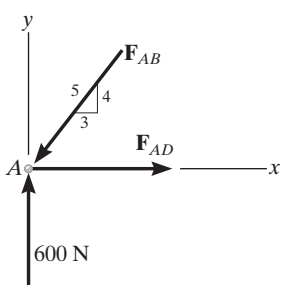

(c)

Joint A. (Fig. 6–10*c*). As shown on the free-body diagram, $\mathbf{F}_{AB}$ is assumed to be compressive and $\mathbf{F}_{AD}$ is tensile. Applying the equations of equilibrium, we have

$$+\uparrow\Sigma F_y = 0; \qquad 600\text{ N} - \tfrac{4}{5}F_{AB} = 0 \qquad F_{AB} = 750\text{ N} \quad (\text{C}) \qquad \textit{Ans.}$$

$$\overset{+}{\rightarrow}\Sigma F_x = 0; \qquad F_{AD} - \tfrac{3}{5}(750\text{ N}) = 0 \qquad F_{AD} = 450\text{ N} \quad (\text{T}) \qquad \textit{Ans.}$$

Joint D. (Fig. 6–10*d*). Using the result for F_{AD} and summing forces in the horizontal direction, Fig. 6–10*d*, we have

$$\xrightarrow{+} \Sigma F_x = 0; \qquad -450\text{ N} + \tfrac{3}{5}F_{DB} + 600\text{ N} = 0 \qquad F_{DB} = -250\text{ N}$$

The negative sign indicates that $\mathbf{F}_{DB}$ acts in the *opposite sense* to that shown in Fig. 6–10*d*.* Hence,

$$F_{DB} = 250\text{ N (T)} \qquad \textit{Ans.}$$

To determine $\mathbf{F}_{DC}$, we can either correct the sense of $\mathbf{F}_{DB}$ on the free-body diagram, and then apply $\Sigma F_y = 0$, or apply this equation and retain the negative sign for F_{DB}, i.e.,

$$+\uparrow \Sigma F_y = 0; \qquad -F_{DC} - \tfrac{4}{5}(-250\text{ N}) = 0 \qquad F_{DC} = 200\text{ N (C)} \qquad \textit{Ans.}$$

Joint C. (Fig. 6–10*e*).

$$\xrightarrow{+} \Sigma F_x = 0; \qquad F_{CB} - 600\text{ N} = 0 \qquad F_{CB} = 600\text{ N (C)} \qquad \textit{Ans.}$$

$$+\uparrow \Sigma F_y = 0; \qquad 200\text{ N} - 200\text{ N} \equiv 0 \quad \text{(check)}$$

NOTE: The analysis is summarized in Fig. 6–10*f*, which shows the free-body diagram for each joint and member.

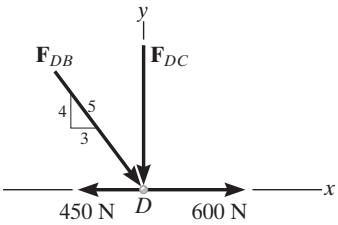

(d)

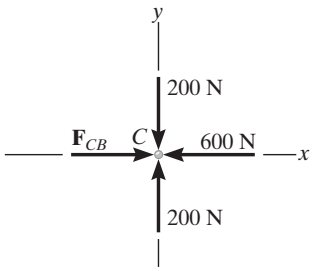

(e)

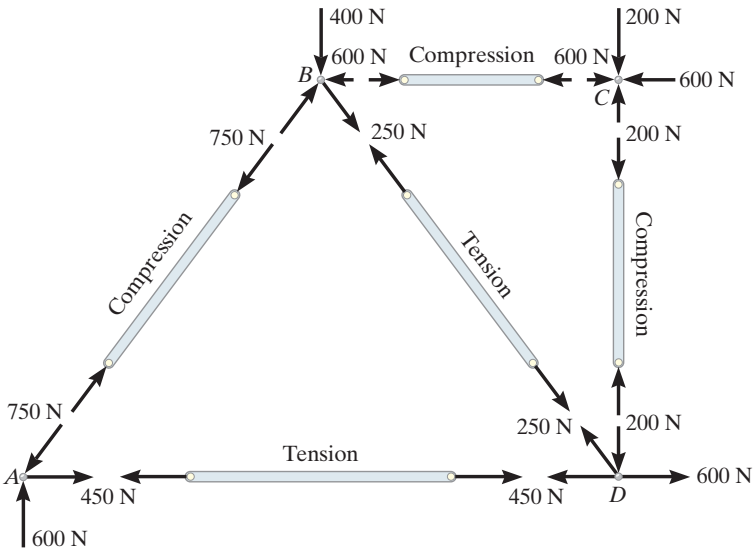

(f)

Fig. 6–10 (cont.)

*The proper sense could have been determined by inspection, prior to applying $\Sigma F_x = 0$.

6.3 Zero-Force Members

Truss analysis using the method of joints is greatly simplified if we can first identify those members which support *no loading*. These *zero-force members* are used to increase the stability of the truss during construction and to provide added support if the loading is changed.

The zero-force members of a truss can generally be found *by inspection* of each of the joints. For example, consider the truss shown in Fig. 6–11*a*. If a free-body diagram of the pin at joint A is drawn, Fig. 6–11*b*, it is seen that members AB and AF are zero-force members. (We could not have come to this conclusion if we had considered the free-body diagrams of joints F or B simply because there are five unknowns at each of these joints.) In a similar manner, consider the free-body diagram of joint D, Fig. 6–11*c*. Here again it is seen that DC and DE are zero-force members. From these observations, we can conclude that *if only two non-collinear members form a truss joint and no external load or support reaction is applied to the joint, the two members must be zero-force members.* The load on the truss in Fig. 6–11*a* is therefore supported by only five members as shown in Fig. 6–11*d*.

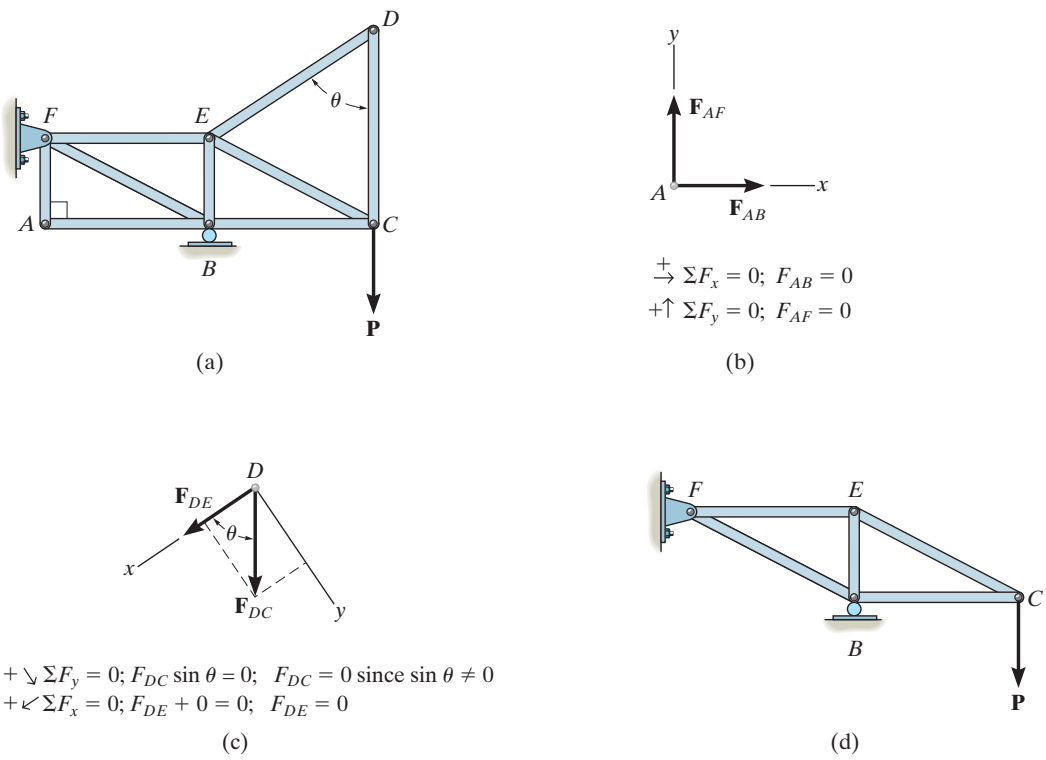

Fig. 6–11

Now consider the truss shown in Fig. 6–12*a*. The free-body diagram of the pin at joint D is shown in Fig. 6–12*b*. By orienting the y axis along members DC and DE and the x axis along member DA, it is seen that DA is a zero-force member. Note that this is also the case for member CA, Fig. 6–12*c*. In general then, *if three members form a truss joint for which two of the members are collinear, the third member is a zero-force member provided no external force or support reaction has a component that acts along this member.* The truss shown in Fig. 6–12*d* is therefore suitable for supporting the load **P**.

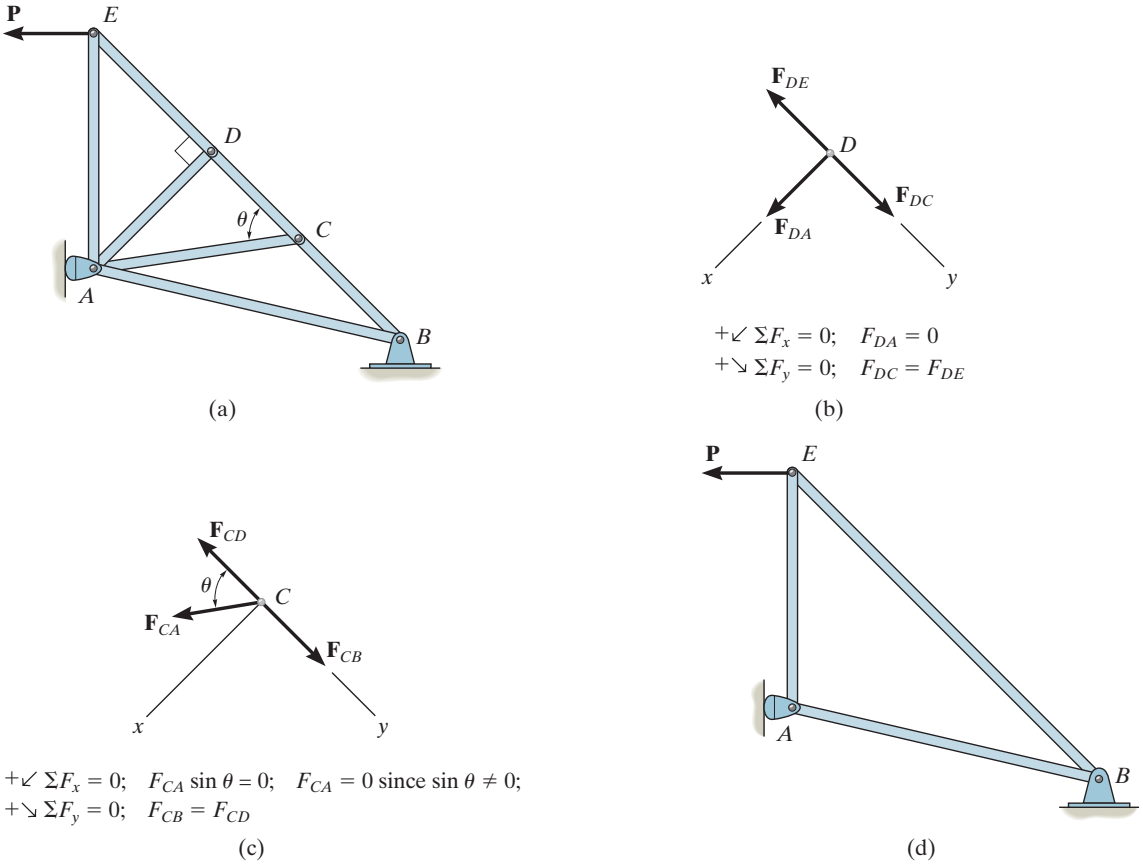

Fig. 6–12

Important Point

- Zero-force members support no load; however, they are necessary for stability, and are available when additional loadings are applied to the joints of the truss. These members can usually be identified by inspection. They occur at joints where only two members are connected and no external load acts along either member. Also, at joints having two collinear members, a third member will be a zero-force member if no external force components act along this member.

Using the method of joints, determine all the zero-force members of the *Fink roof truss* shown in Fig. 6–13*a*. Assume all joints are pin connected.

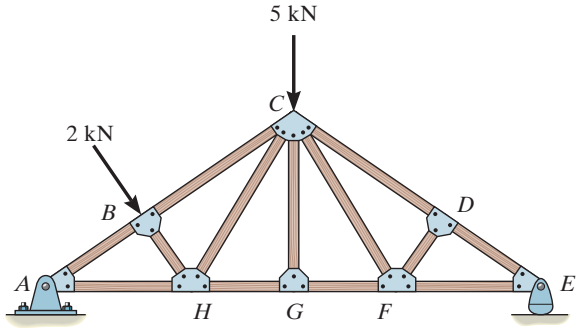

(a)

Fig. 6–13

SOLUTION

Look for joint geometries that have three members for which two are collinear. We have

Joint G. (Fig. 6–13*b*).

$+\uparrow \Sigma F_y = 0;$ $\qquad F_{GC} = 0$ *Ans.*

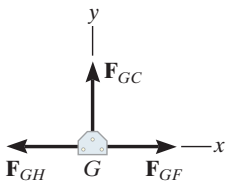

(b)

Realize that we could not conclude that *GC* is a zero-force member by considering joint *C*, where there are five unknowns. The fact that *GC* is a zero-force member means that the 5-kN load at *C* must be supported by members *CB*, *CH*, *CF*, and *CD*.

Joint D. (Fig. 6–13*c*).

$+\swarrow \Sigma F_x = 0;$ $\qquad F_{DF} = 0$ *Ans.*

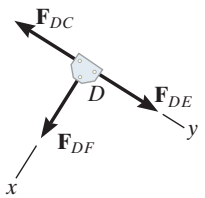

(c)

Joint F. (Fig. 6–13*d*).

$+\uparrow \Sigma F_y = 0;$ $\qquad F_{FC} \cos\theta = 0$ $\quad$ Since $\theta \neq 90°$, $\quad F_{FC} = 0$ *Ans.*

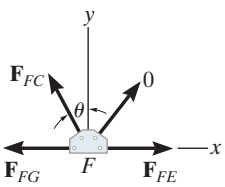

(d)

NOTE: If joint *B* is analyzed, Fig. 6–13*e*,

$+\searrow \Sigma F_x = 0;$ $\qquad 2\text{ kN} - F_{BH} = 0$ $\quad F_{BH} = 2\text{ kN}$ (C)

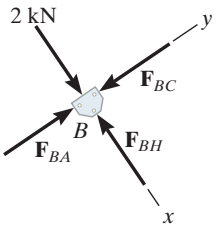

(e)

Also, F_{HC} must satisfy $\Sigma F_y = 0$, Fig. 6–13*f*, and therefore *HC* is *not* a zero-force member.

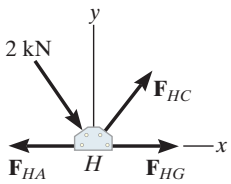

(f)

PRELIMINARY PROBLEMS

P6–1. In each case, calculate the support reactions and then draw the free-body diagrams of joints A, B, and C of the truss.

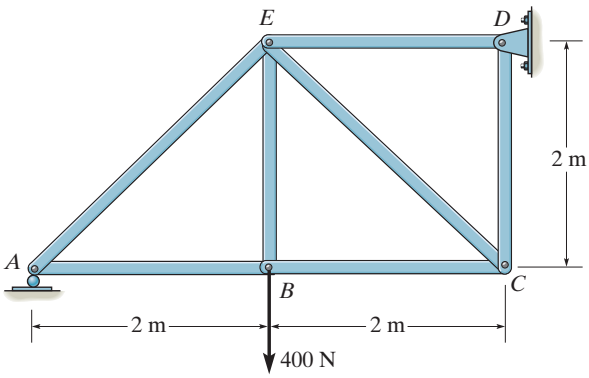

(a)

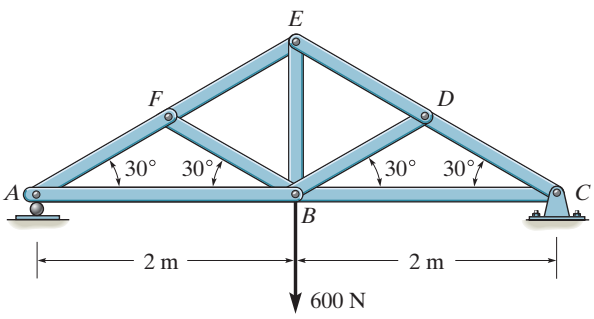

(b)

Prob. P6–1

P6–2. Identify the zero-force members in each truss.

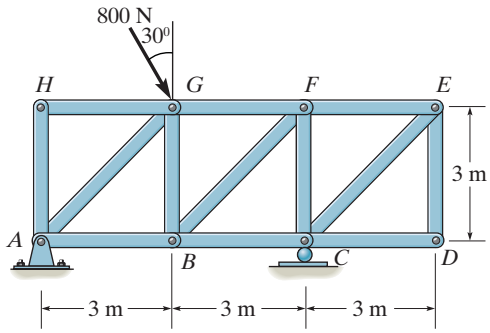

(a)

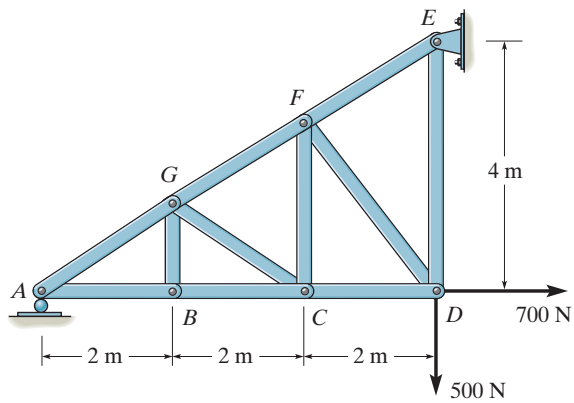

(b)

Prob. P6–2

All problem solutions must include FBDs.

F6–1. Determine the force in each member of the truss. State if the members are in tension or compression.

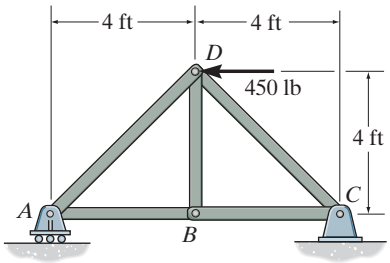

Prob. F6–1

F6–2. Determine the force in each member of the truss. State if the members are in tension or compression.

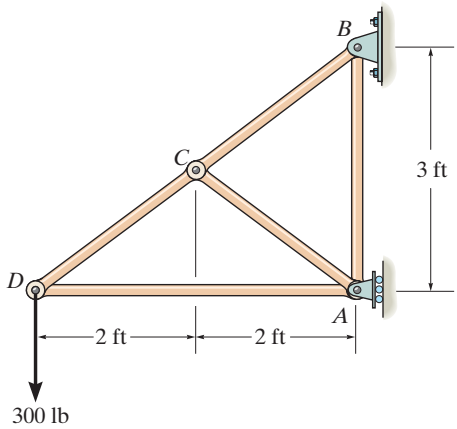

Prob. F6–2

F6–3. Determine the force in each member of the truss. State if the members are in tension or compression.

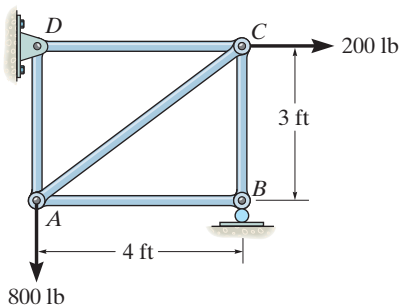

Prob. F6–3

F6–4. Determine the greatest load P that can be applied to the truss so that none of the members are subjected to a force exceeding either 2 kN in tension or 1.5 kN in compression.

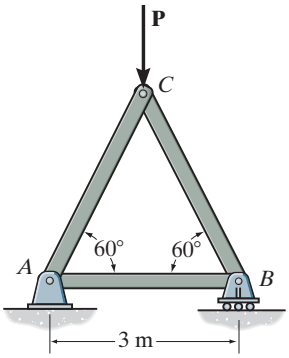

Prob. F6–4

F6–5. Identify the zero-force members in the truss.

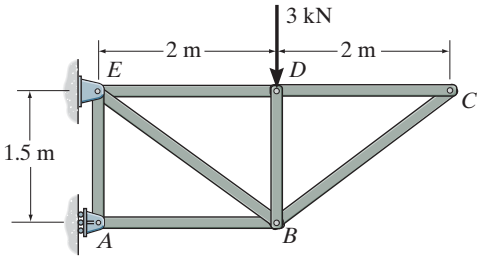

Prob. F6–5

F6–6. Determine the force in each member of the truss. State if the members are in tension or compression.

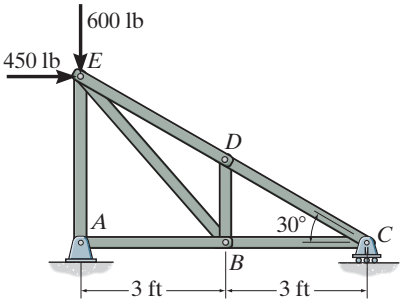

Prob. F6–6

All problem solutions must include FBDs.

6–1. Determine the force in each member of the truss and state if the members are in tension or compression. Set $P_1 = 20$ kN, $P_2 = 10$ kN.

6–2. Determine the force in each member of the truss and state if the members are in tension or compression. Set $P_1 = 45$ kN, $P_2 = 30$ kN.

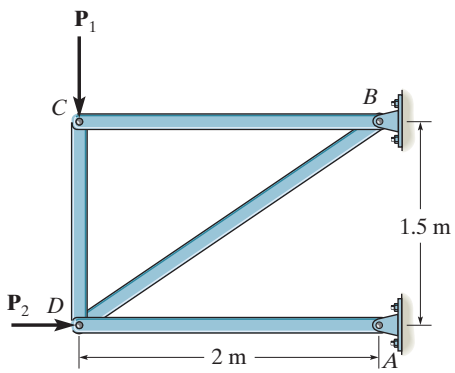

Probs. 6–1/2

6–3. Determine the force in each member of the truss. State if the members are in tension or compression.

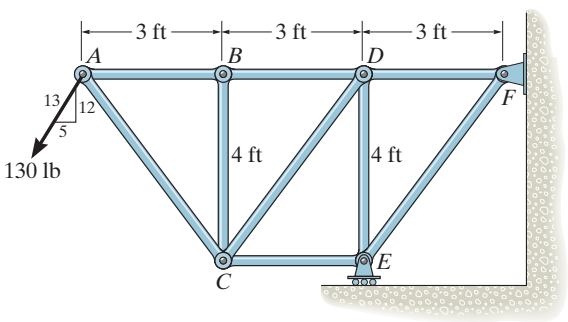

Prob. 6–3

***6–4.** Determine the force in each member of the truss and state if the members are in tension or compression.

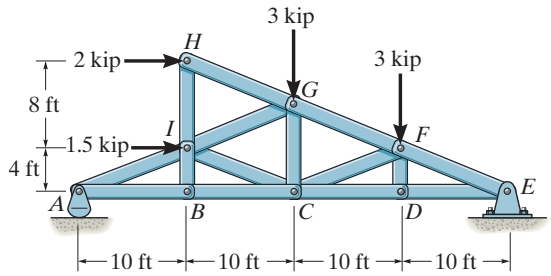

Prob. 6–4

6–5. Determine the force in each member of the truss, and state if the members are in tension or compression. Set $\theta = 0°$.

6–6. Determine the force in each member of the truss, and state if the members are in tension or compression. Set $\theta = 30°$.

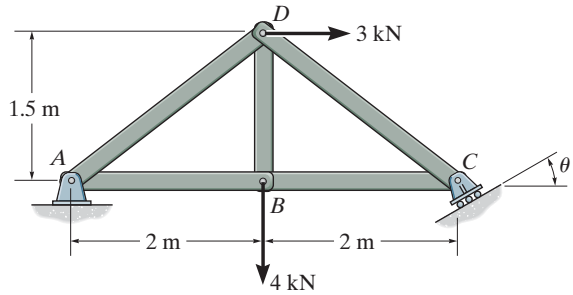

Probs. 6–5/6

6–7. Determine the force in each member of the truss and state if the members are in tension or compression.

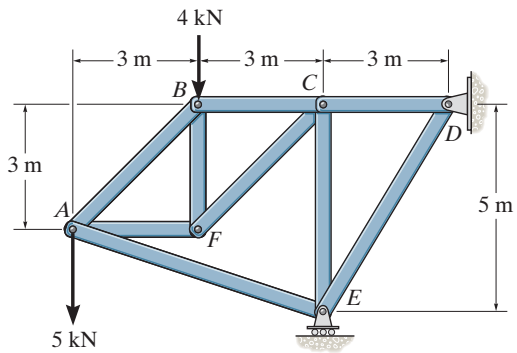

Prob. 6–7

***6–8.** Determine the force in each member of the truss and state if the members are in tension or compression.

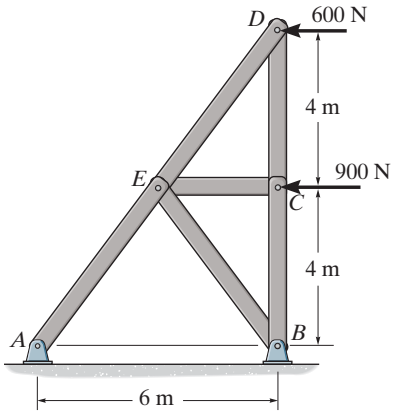

Prob. 6–8

6–9. Determine the force in each member of the truss and state if the members are in tension or compression. Set $P_1 = 3$ kN, $P_2 = 6$ kN.

6–10. Determine the force in each member of the truss and state if the members are in tension or compression. Set $P_1 = 6$ kN, $P_2 = 9$ kN.

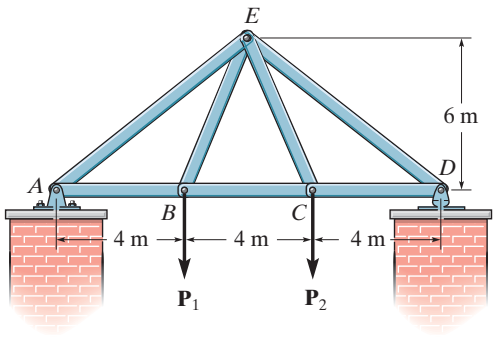

Probs. 6–9/10

6–11. Determine the force in each member of the *Pratt truss*, and state if the members are in tension or compression.

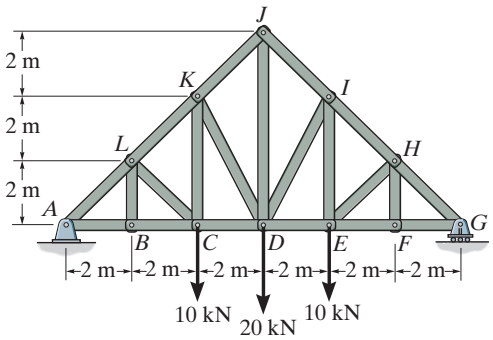

Prob. 6–11

***6–12.** Determine the force in each member of the truss and state if the members are in tension or compression.

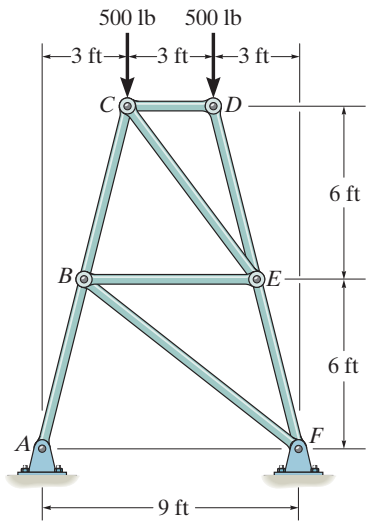

Prob. 6–12

6–13. Determine the force in each member of the truss in terms of the load P and state if the members are in tension or compression.

6–14. Members AB and BC can each support a maximum compressive force of 800 lb, and members AD, DC, and BD can support a maximum tensile force of 1500 lb. If $a = 10$ ft, determine the greatest load P the truss can support.

6–15. Members AB and BC can each support a maximum compressive force of 800 lb, and members AD, DC, and BD can support a maximum tensile force of 2000 lb. If $a = 6$ ft, determine the greatest load P the truss can support.

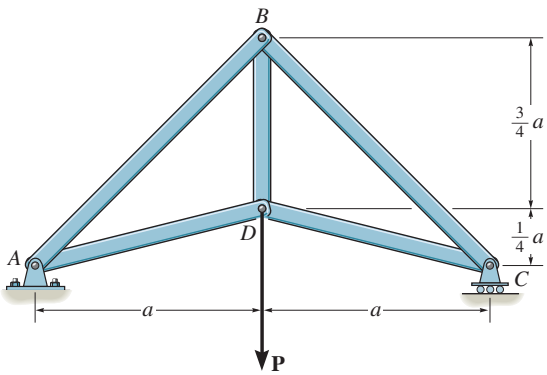

Probs. 6–13/14/15

***6–16.** Determine the force in each member of the truss. State whether the members are in tension or compression. Set $P = 8$ kN.

6–17. If the maximum force that any member can support is 8 kN in tension and 6 kN in compression, determine the maximum force P that can be supported at joint D.

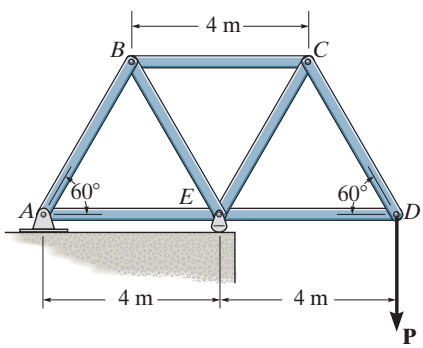

Probs. 6–16/17

6–18. Determine the force in each member of the truss and state if the members are in tension or compression. Set $P_1 = 10$ kN, $P_2 = 8$ kN.

6–19. Determine the force in each member of the truss and state if the members are in tension or compression. Set $P_1 = 8$ kN, $P_2 = 12$ kN.

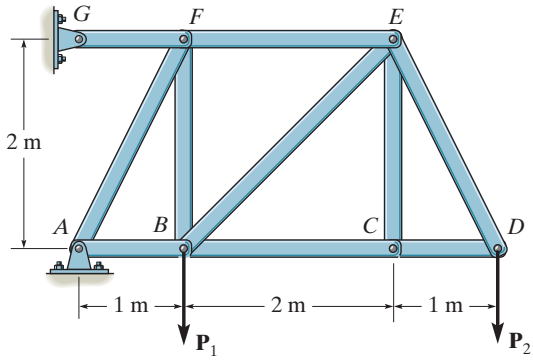

Probs. 6–18/19

***6–20.** Determine the force in each member of the truss and state if the members are in tension or compression. Set $P_1 = 9$ kN, $P_2 = 15$ kN.

6–21. Determine the force in each member of the truss and state if the members are in tension or compression. Set $P_1 = 30$ kN, $P_2 = 15$ kN.

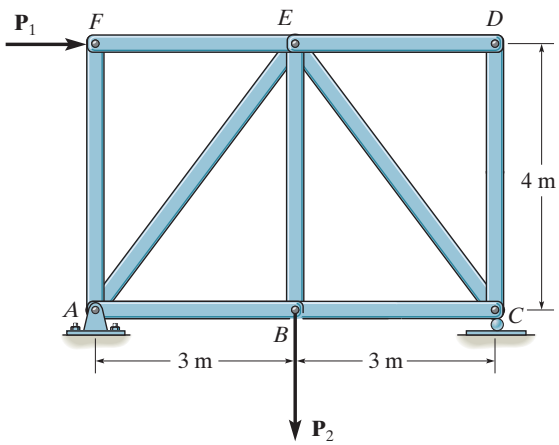

Probs. 6–20/21

6.6 Frames and Machines

Frames and machines are two types of structures which are often composed of pin-connected ***multiforce members***, i.e., members that are subjected to more than two forces. ***Frames*** are used to support loads, whereas ***machines*** contain moving parts and are designed to transmit and alter the effect of forces. Provided a frame or machine contains no more supports or members than are necessary to prevent its collapse, the forces acting at the joints and supports can be determined by applying the equations of equilibrium to each of its members. Once these forces are obtained, it is then possible to *design* the size of the members, connections, and supports using the theory of mechanics of materials and an appropriate engineering design code.

This crane is a typical example of a framework. (© Russell C. Hibbeler)

Free-Body Diagrams. In order to determine the forces acting at the joints and supports of a frame or machine, the structure must be disassembled and the free-body diagrams of its parts must be drawn. The following important points *must* be observed:

- Isolate each part by drawing its *outlined shape*. Then show all the forces and/or couple moments that act on the part. Make sure to *label* or *identify* each known and unknown force and couple moment with reference to an established *x, y* coordinate system. Also, indicate any dimensions used for taking moments. Most often the equations of equilibrium are easier to apply if the forces are represented by their rectangular components. As usual, the sense of an unknown force or couple moment can be assumed.
- Identify all the two-force members in the structure and represent their free-body diagrams as having two equal but opposite collinear forces acting at their points of application. (See Sec. 5.4.) By recognizing the two-force members, we can avoid solving an unnecessary number of equilibrium equations.
- Forces common to *any* two *contacting* members act with equal magnitudes but opposite sense on the respective members. If the two members are treated as a *"system" of connected members*, then these forces are *"internal"* and are *not shown* on the *free-body diagram of the system*; however, if the free-body diagram of *each member* is drawn, the forces are *"external"* and *must* be shown as equal in magnitude and opposite in direction on each of the two free-body diagrams.

Common tools such as these pliers act as simple machines. Here the applied force on the handles creates a much larger force at the jaws. (© Russell C. Hibbeler)

The following examples graphically illustrate how to draw the free-body diagrams of a dismembered frame or machine. In all cases, the weight of the members is neglected.

EXAMPLE 6.9

For the frame shown in Fig. 6–21*a*, draw the free-body diagram of (a) each member, (b) the pins at *B* and *A*, and (c) the two members connected together.

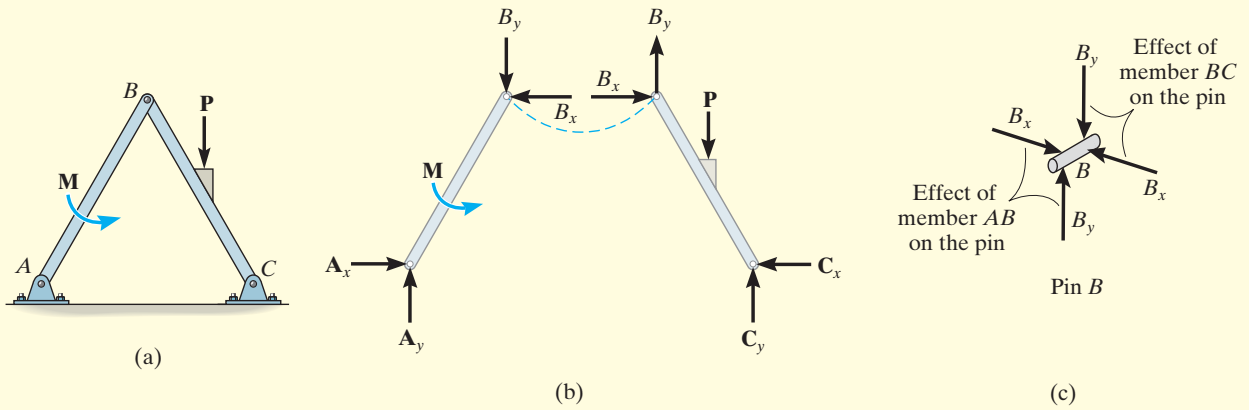

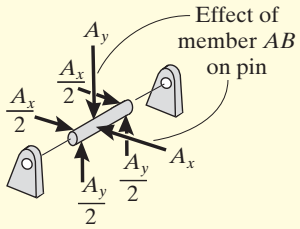

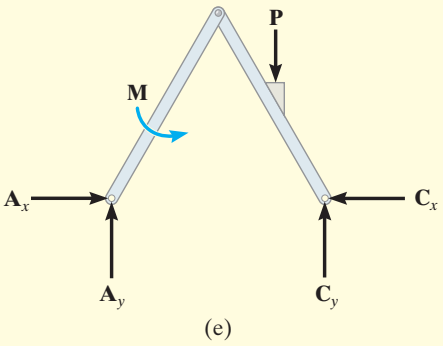

Fig. 6–21

SOLUTION

Part (a). By inspection, members *BA* and *BC* are *not* two-force members. Instead, as shown on the free-body diagrams, Fig. 6–21*b*, *BC* is subjected to a force from each of the pins at *B* and *C* and the external force **P**. Likewise, *AB* is subjected to a force from each of the pins at *A* and *B* and the external couple moment **M**. The pin forces are represented by their *x* and *y* components.

Part (b). The pin at *B* is subjected to only *two forces*, i.e., the force of member *BC* and the force of member *AB*. For *equilibrium* these forces (or their respective components) must be equal but opposite, Fig. 6–21*c*. Realize that Newton's third law is applied between the pin and its connected members, i.e., the effect of the pin on the two members, Fig. 6–21*b*, and the equal but opposite effect of the two members on the pin, Fig. 6–21*c*. In the same manner, there are three forces on pin *A*, Fig. 6–21*d*, caused by the force components of member *AB* and each of the two pin leafs.

Part (c). The free-body diagram of both members connected together, yet removed from the supporting pins at *A* and *C*, is shown in Fig. 6–21*e*. The force components $\mathbf{B}_x$ and $\mathbf{B}_y$ are *not shown* on this diagram since they are *internal* forces (Fig. 6–21*b*) and therefore cancel out. Also, to be consistent when later applying the equilibrium equations, the unknown force components at *A* and *C* must act in the *same sense* as those shown in Fig. 6–21*b*.

EXAMPLE 6.10

A constant tension in the conveyor belt is maintained by using the device shown in Fig. 6–22*a*. Draw the free-body diagrams of the frame and the cylinder (or pulley) that the belt surrounds. The suspended block has a weight of *W*.

(a)

Fig. 6–22 (© Russell C. Hibbeler)

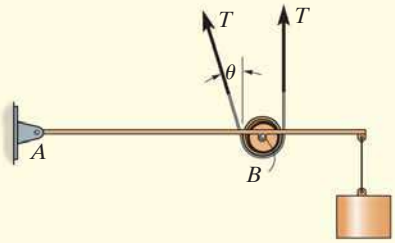

(b)

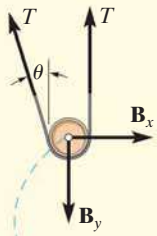

(c)

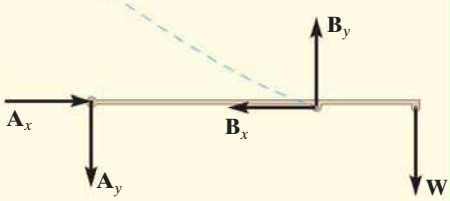

(d)

SOLUTION

The idealized model of the device is shown in Fig. 6–22*b*. Here the angle θ is assumed to be known. From this model, the free-body diagrams of the pulley and frame are shown in Figs. 6–22*c* and 6–22*d*, respectively. Note that the force components $\mathbf{B}_x$ and $\mathbf{B}_y$ that the pin at *B* exerts on the pulley must be equal but opposite to the ones acting on the frame. See Fig. 6–21*c* of Example 6.9.

EXAMPLE 6.11

For the frame shown in Fig. 6–23*a*, draw the free-body diagrams of (a) the entire frame including the pulleys and cords, (b) the frame without the pulleys and cords, and (c) each of the pulleys.

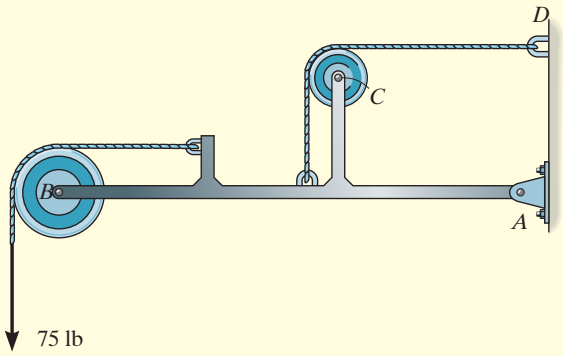

(a)

SOLUTION

Part (a). When the entire frame including the pulleys and cords is considered, the interactions at the points where the pulleys and cords are connected to the frame become pairs of *internal* forces which cancel each other and therefore are not shown on the free-body diagram, Fig. 6–23*b*.

Part (b). When the cords and pulleys are removed, their effect *on the frame* must be shown, Fig. 6–23*c*.

Part (c). The force components $\mathbf{B}_x$, $\mathbf{B}_y$, $\mathbf{C}_x$, $\mathbf{C}_y$ of the pins on the pulleys, Fig. 6–23*d*, are equal but opposite to the force components exerted by the pins on the frame, Fig. 6–23*c*. See Example 6.9.

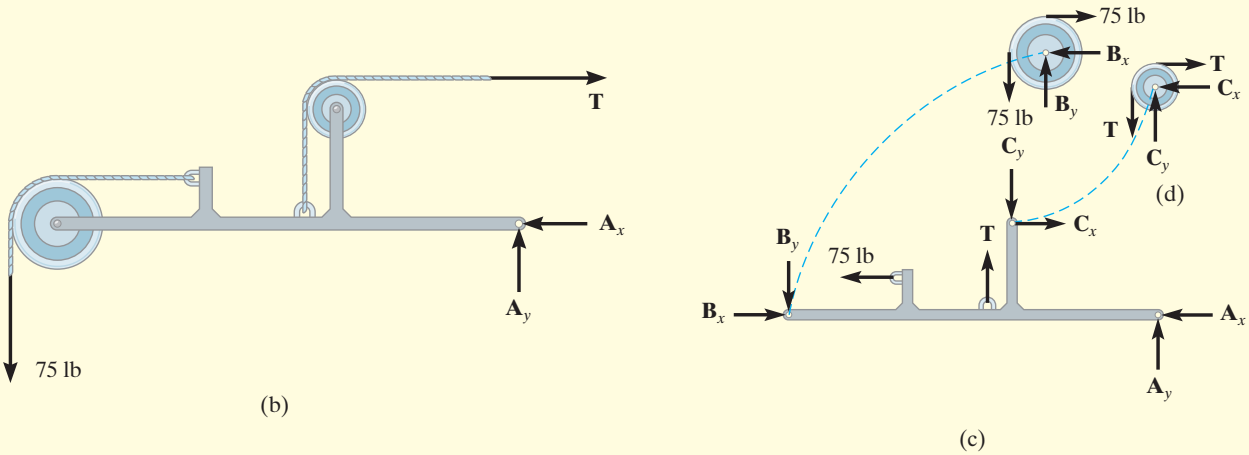

Fig. 6–23

EXAMPLE 6.12

Draw the free-body diagrams of the members of the backhoe, shown in the photo, Fig. 6–24*a*. The bucket and its contents have a weight *W*.

(a)

Fig. 6–24 (© Russell C. Hibbeler)

SOLUTION

The idealized model of the assembly is shown in Fig. 6–24*b*. By inspection, members *AB*, *BC*, *BE*, and *HI* are all two-force members since they are pin connected at their end points and no other forces act on them. The free-body diagrams of the bucket and the stick are shown in Fig. 6–24*c*. Note that pin *C* is subjected to only two forces, whereas the pin at *B* is subjected to three forces, Fig. 6–24*d*. The free-body diagram of the entire assembly is shown in Fig. 6–24*e*.

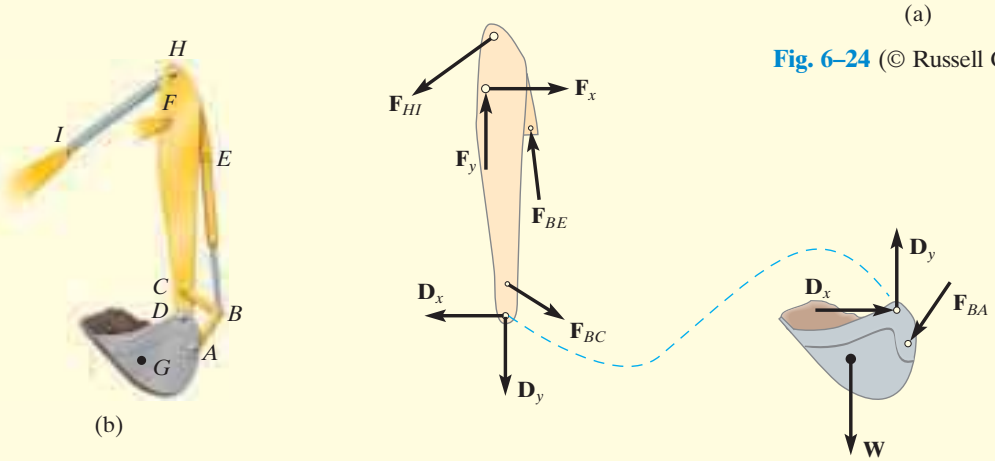

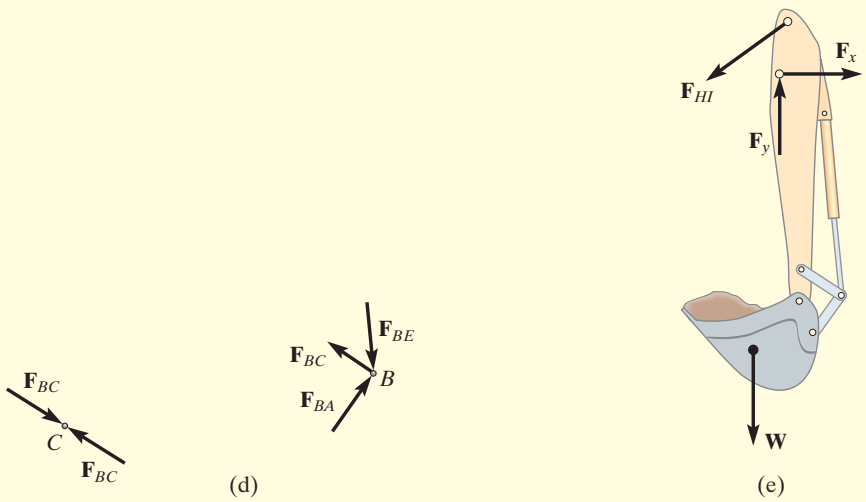

EXAMPLE 6.13

Draw the free-body diagram of each part of the smooth piston and link mechanism used to crush recycled cans, Fig. 6–25*a*.

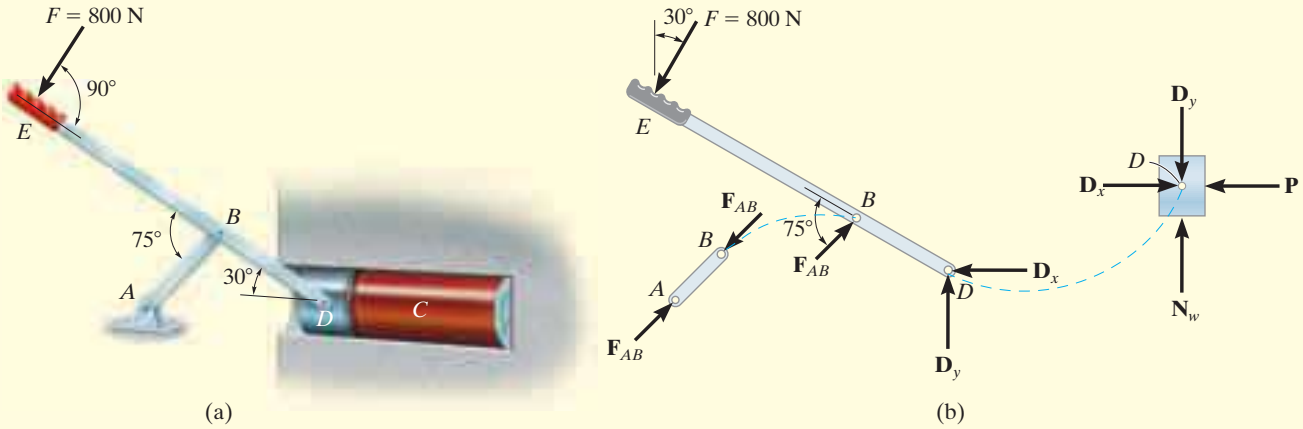

Fig. 6–25

SOLUTION

By inspection, member *AB* is a two-force member. The free-body diagrams of the three parts are shown in Fig. 6–25*b*. Since the pins at *B* and *D* *connect only two parts together*, the forces there are shown as equal but opposite on the separate free-body diagrams of their connected members. In particular, four components of force act on the piston: $\mathbf{D}_x$ and $\mathbf{D}_y$ represent the effect of the pin (or lever *EBD*), $\mathbf{N}_w$ is the *resultant force* of the wall support, and **P** is the resultant compressive force caused by the can *C*. The directional sense of each of the unknown forces is assumed, and the correct sense will be established after the equations of equilibrium are applied.

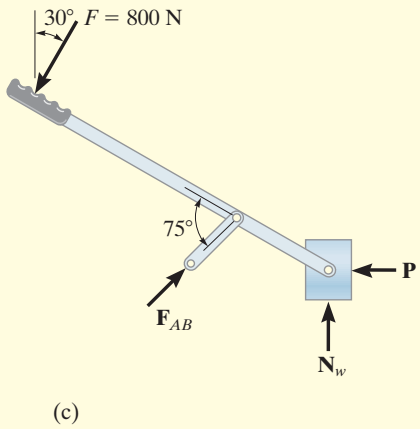

NOTE: A free-body diagram of the entire assembly is shown in Fig. 6–25*c*. Here the forces between the components are internal and are not shown on the free-body diagram.

Before proceeding, it is highly recommended that you cover the solutions of these examples and attempt to draw the requested free-body diagrams. When doing so, make sure the work is neat and that all the forces and couple moments are properly labeled.

Procedure for Analysis

The joint reactions on frames or machines (structures) composed of multiforce members can be determined using the following procedure.

Free-Body Diagram.

- Draw the free-body diagram of the entire frame or machine, a portion of it, or each of its members. The choice should be made so that it leads to the most direct solution of the problem.
- Identify the two-force members. Remember that regardless of their shape, they have equal but opposite collinear forces acting at their ends.
- When the free-body diagram of a group of members of a frame or machine is drawn, the forces between the connected parts of this group are internal forces and are not shown on the free-body diagram of the group.
- Forces common to two members which are in contact act with equal magnitude but opposite sense on the respective free-body diagrams of the members.
- In many cases it is possible to tell by inspection the proper sense of the unknown forces acting on a member; however, if this seems difficult, the sense can be assumed.
- Remember that once the free-body diagram is drawn, a couple moment is a free vector and can act at any point on the diagram. Also, a force is a sliding vector and can act at any point along its line of action.

Equations of Equilibrium.

- Count the number of unknowns and compare it to the total number of equilibrium equations that are available. In two dimensions, there are three equilibrium equations that can be written for each member.
- Sum moments about a point that lies at the intersection of the lines of action of as many of the unknown forces as possible.
- If the solution of a force or couple moment magnitude is found to be negative, it means the sense of the force is the reverse of that shown on the free-body diagram.

EXAMPLE 6.14

Determine the tension in the cables and also the force **P** required to support the 600-N force using the frictionless pulley system shown in Fig. 6–26*a*.

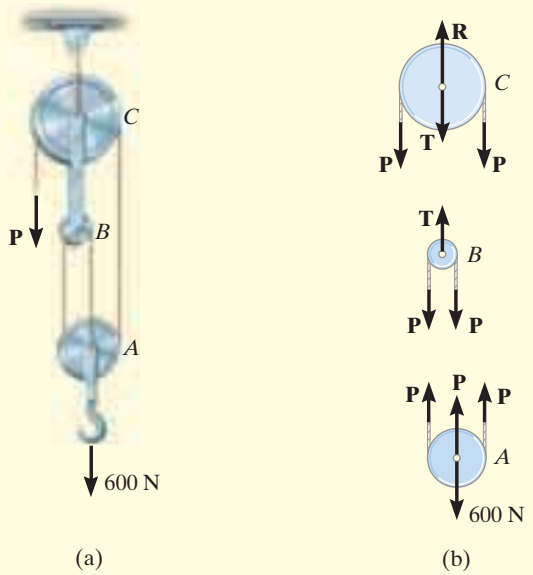

Fig. 6–26

SOLUTION

Free-Body Diagram. A free-body diagram of each pulley *including* its pin and a portion of the contacting cable is shown in Fig. 6–26*b*. Since the cable is *continuous*, it has a *constant tension P* acting throughout its length. The link connection between pulleys *B* and *C* is a two-force member, and therefore it has an unknown tension *T* acting on it. Notice that the *principle of action, equal but opposite reaction* must be carefully observed for forces **P** and **T** when the *separate* free-body diagrams are drawn.

Equations of Equilibrium. The three unknowns are obtained as follows:

Pulley A

$+\uparrow \Sigma F_y = 0; \qquad 3P - 600\text{ N} = 0 \qquad P = 200\text{ N}$ *Ans.*

Pulley B

$+\uparrow \Sigma F_y = 0; \qquad T - 2P = 0 \qquad T = 400\text{ N}$ *Ans.*

Pulley C

$+\uparrow \Sigma F_y = 0; \qquad R - 2P - T = 0 \qquad R = 800\text{ N}$ *Ans.*

EXAMPLE 6.15

A 500-kg elevator car in Fig. 6–27*a* is being hoisted by motor *A* using the pulley system shown. If the car is traveling with a constant speed, determine the force developed in the two cables. Neglect the mass of the cable and pulleys.

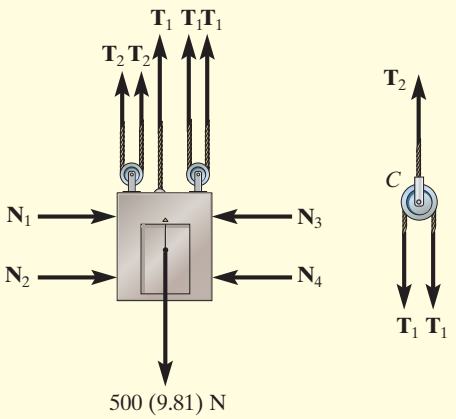

(b)

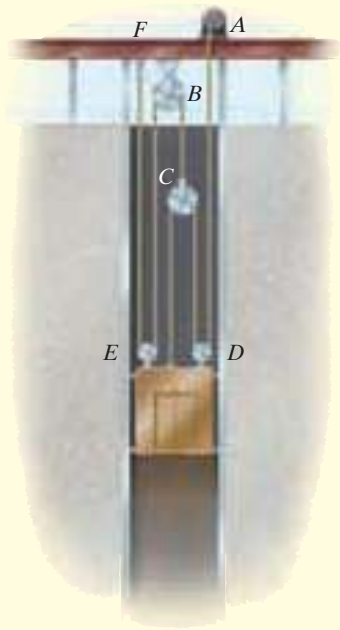

(a)

Fig. 6–27

SOLUTION

Free-Body Diagram. We can solve this problem using the free-body diagrams of the elevator car and pulley *C*, Fig. 6–27*b*. The tensile forces developed in the cables are denoted as T_1 and T_2.

Equations of Equilibrium. For pulley *C*,

$$+\uparrow \Sigma F_y = 0; \qquad T_2 - 2T_1 = 0 \qquad \text{or} \qquad T_2 = 2T_1 \tag{1}$$

For the elevator car,

$$+\uparrow \Sigma F_y = 0; \qquad 3T_1 + 2T_2 - 500(9.81)\text{ N} = 0 \tag{2}$$

Substituting Eq. (1) into Eq. (2) yields

$$3T_1 + 2(2T_1) - 500(9.81)\text{ N} = 0$$

$$T_1 = 700.71\text{ N} = 701\text{ N} \qquad \textit{Ans.}$$

Substituting this result into Eq. (1),

$$T_2 = 2(700.71)\text{ N} = 1401\text{ N} = 1.40\text{ kN} \qquad \textit{Ans.}$$

EXAMPLE 6.16

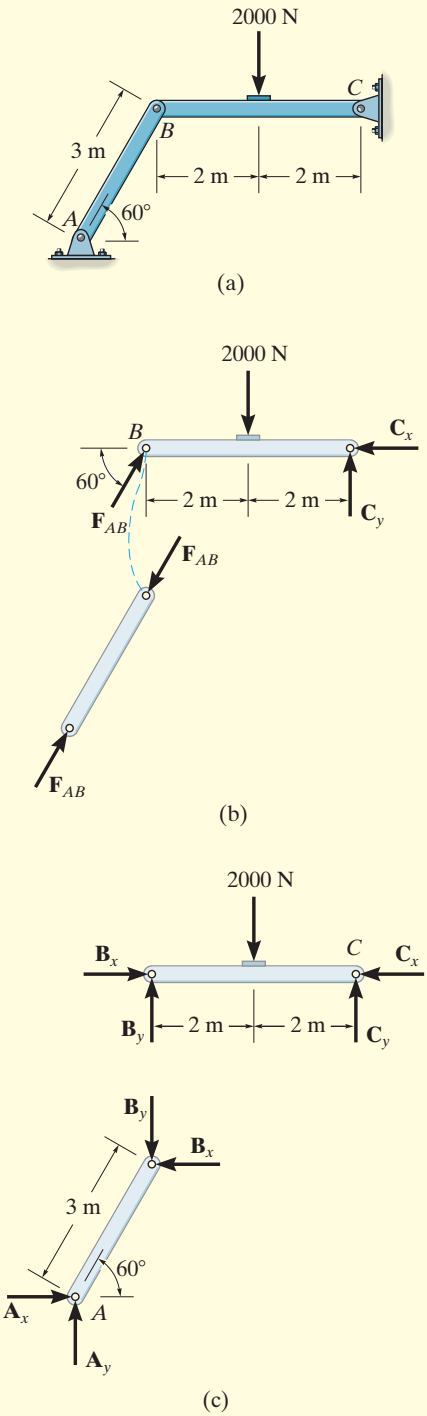

Fig. 6–28

Determine the horizontal and vertical components of force which the pin at C exerts on member BC of the frame in Fig. 6–28*a*.

SOLUTION I

Free-Body Diagrams. By inspection it can be seen that AB is a two-force member. The free-body diagrams are shown in Fig. 6–28*b*.

Equations of Equilibrium. The *three unknowns* can be determined by applying the three equations of equilibrium to member BC.

$$\circlearrowleft + \Sigma M_C = 0;\ 2000\text{ N}(2\text{ m}) - (F_{AB}\sin 60°)(4\text{ m}) = 0 \quad F_{AB} = 1154.7\text{ N}$$

$$\overset{+}{\rightarrow} \Sigma F_x = 0;\ 1154.7\cos 60°\text{ N} - C_x = 0 \quad C_x = 577\text{ N} \qquad \textit{Ans.}$$

$$+\uparrow \Sigma F_y = 0;\ 1154.7\sin 60°\text{ N} - 2000\text{ N} + C_y = 0$$

$$C_y = 1000\text{ N} \qquad \textit{Ans.}$$

SOLUTION II

Free-Body Diagrams. If one does not recognize that AB is a two-force member, then more work is involved in solving this problem. The free-body diagrams are shown in Fig. 6–28*c*.

Equations of Equilibrium. The *six unknowns* are determined by applying the three equations of equilibrium to each member.

Member AB

$$\circlearrowleft + \Sigma M_A = 0;\quad B_x(3\sin 60°\text{ m}) - B_y(3\cos 60°\text{ m}) = 0 \qquad (1)$$

$$\overset{+}{\rightarrow} \Sigma F_x = 0;\quad A_x - B_x = 0 \qquad (2)$$

$$+\uparrow \Sigma F_y = 0;\quad A_y - B_y = 0 \qquad (3)$$

Member BC

$$\circlearrowleft + \Sigma M_C = 0;\quad 2000\text{ N}(2\text{ m}) - B_y(4\text{ m}) = 0 \qquad (4)$$

$$\overset{+}{\rightarrow} \Sigma F_x = 0;\quad B_x - C_x = 0 \qquad (5)$$

$$+\uparrow \Sigma F_y = 0;\quad B_y - 2000\text{ N} + C_y = 0 \qquad (6)$$

The results for C_x and C_y can be determined by solving these equations in the following sequence: 4, 1, 5, then 6. The results are

$$B_y = 1000\text{ N}$$

$$B_x = 577\text{ N}$$

$$C_x = 577\text{ N} \qquad \textit{Ans.}$$

$$C_y = 1000\text{ N} \qquad \textit{Ans.}$$

By comparison, Solution I is simpler since the requirement that F_{AB} in Fig. 6–28*b* be equal, opposite, and collinear at the ends of member AB automatically satisfies Eqs. 1, 2, and 3 above and therefore eliminates the need to write these equations. ***As a result, save yourself some time and effort by always identifying the two-force members before starting the analysis!***

EXAMPLE 6.17

The compound beam shown in Fig. 6–29*a* is pin connected at *B*. Determine the components of reaction at its supports. Neglect its weight and thickness.

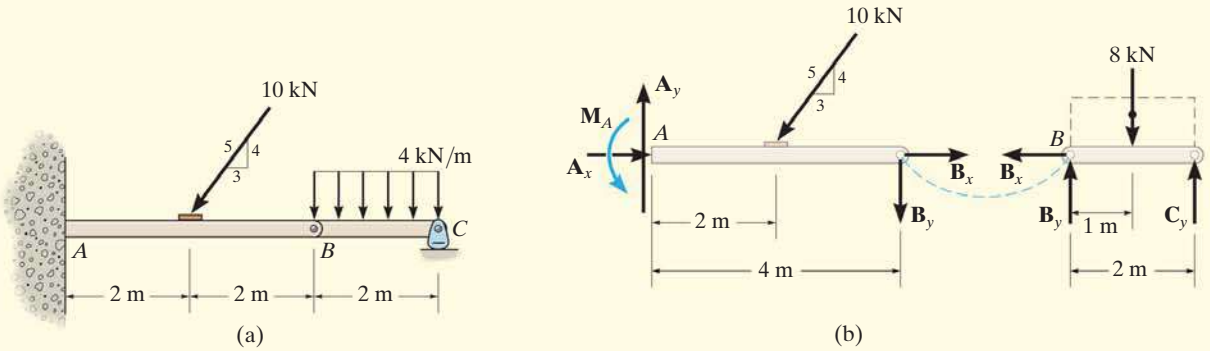

Fig. 6–29

SOLUTION

Free-Body Diagrams. By inspection, if we consider a free-body diagram of the *entire beam ABC*, there will be three unknown reactions at *A* and one at *C*. These four unknowns cannot all be obtained from the three available equations of equilibrium, and so for the solution it will become necessary to dismember the beam into its two segments, as shown in Fig. 6–29*b*.

Equations of Equilibrium. The six unknowns are determined as follows:

Segment BC

$$\overset{+}{\leftarrow} \Sigma F_x = 0; \qquad B_x = 0$$

$$\circlearrowleft + \Sigma M_B = 0; \qquad -8\text{ kN}(1\text{ m}) + C_y(2\text{ m}) = 0$$

$$+\uparrow \Sigma F_y = 0; \qquad B_y - 8\text{ kN} + C_y = 0$$

Segment AB

$$\overset{+}{\rightarrow} \Sigma F_x = 0; \qquad A_x - (10\text{ kN})\left(\tfrac{3}{5}\right) + B_x = 0$$

$$\circlearrowleft + \Sigma M_A = 0; \qquad M_A - (10\text{ kN})\left(\tfrac{4}{5}\right)(2\text{ m}) - B_y(4\text{ m}) = 0$$

$$+\uparrow \Sigma F_y = 0; \qquad A_y - (10\text{ kN})\left(\tfrac{4}{5}\right) - B_y = 0$$

Solving each of these equations successively, using previously calculated results, we obtain

$A_x = 6\text{ kN}$ $\quad A_y = 12\text{ kN}$ $\quad M_A = 32\text{ kN}\cdot\text{m}$ *Ans.*

$B_x = 0$ $\quad B_y = 4\text{ kN}$

$C_y = 4\text{ kN}$ *Ans.*

EXAMPLE 6.18

The two planks in Fig. 6–30*a* are connected together by cable *BC* and a smooth spacer *DE*. Determine the reactions at the smooth supports *A* and *F*, and also find the force developed in the cable and spacer.

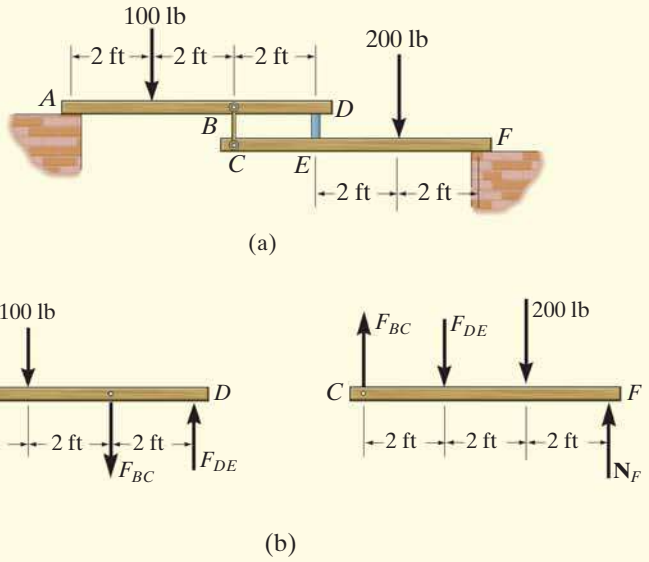

Fig. 6–30

SOLUTION

Free-Body Diagrams. The free-body diagram of each plank is shown in Fig. 6–30*b*. It is important to apply Newton's third law to the interaction forces F_{BC} and F_{DE} as shown.

Equations of Equilibrium. For plank *AD*,

$$\circlearrowleft + \Sigma M_A = 0; \qquad F_{DE}(6\text{ ft}) - F_{BC}(4\text{ ft}) - 100\text{ lb}(2\text{ ft}) = 0$$

For plank *CF*,

$$\circlearrowleft + \Sigma M_F = 0; \qquad F_{DE}(4\text{ ft}) - F_{BC}(6\text{ ft}) + 200\text{ lb}(2\text{ ft}) = 0$$

Solving simultaneously,

$$F_{DE} = 140\text{ lb} \quad F_{BC} = 160\text{ lb} \qquad \textit{Ans.}$$

Using these results, for plank *AD*,

$$+\uparrow \Sigma F_y = 0; \qquad N_A + 140\text{ lb} - 160\text{ lb} - 100\text{ lb} = 0$$

$$N_A = 120\text{ lb} \qquad \textit{Ans.}$$

And for plank *CF*,

$$+\uparrow \Sigma F_y = 0; \qquad N_F + 160\text{ lb} - 140\text{ lb} - 200\text{ lb} = 0$$

$$N_F = 180\text{ lb} \qquad \textit{Ans.}$$

NOTE: Draw the free-body diagram of the system of *both* planks and apply $\Sigma M_A = 0$ to determine N_F. Then use the free-body diagram of *CEF* to determine F_{DE} and F_{BC}.

EXAMPLE 6.19

The 75-kg man in Fig. 6–31*a* attempts to lift the 40-kg uniform beam off the roller support at B. Determine the tension developed in the cable attached to B and the normal reaction of the man on the beam when this is about to occur.

SOLUTION

Free-Body Diagrams. The tensile force in the cable will be denoted as T_1. The free-body diagrams of the pulley E, the man, and the beam are shown in Fig. 6–31*b*. Since the man must lift the beam off the roller B then $N_B = 0$. When drawing each of these diagrams, it is very important to apply Newton's third law.

Equations of Equilibrium. Using the free-body diagram of pulley E,

$$+\uparrow \Sigma F_y = 0; \qquad 2T_1 - T_2 = 0 \quad \text{or} \quad T_2 = 2T_1 \tag{1}$$

Referring to the free-body diagram of the man using this result,

$$+\uparrow \Sigma F_y = 0 \qquad N_m + 2T_1 - 75(9.81)\text{ N} = 0 \tag{2}$$

Summing moments about point A on the beam,

$$\circlearrowleft + \Sigma M_A = 0; \; T_1(3\text{ m}) - N_m(0.8\text{ m}) - [40(9.81)\text{ N}](1.5\text{ m}) = 0 \tag{3}$$

Solving Eqs. 2 and 3 simultaneously for T_1 and N_m, then using Eq. (1) for T_2, we obtain

$$T_1 = 256\text{ N} \qquad N_m = 224\text{ N} \qquad T_2 = 512\text{ N} \qquad \textit{Ans.}$$

SOLUTION II

A direct solution for T_1 can be obtained by considering the beam, the man, and pulley E as a *single system*. The free-body diagram is shown in Fig. 6–31*c*. Thus,

$$\circlearrowleft + \Sigma M_A = 0; \qquad 2T_1(0.8\text{ m}) - [75(9.81)\text{ N}](0.8\text{ m}) - [40(9.81)\text{ N}](1.5\text{ m}) + T_1(3\text{ m}) = 0$$

$$T_1 = 256\text{ N} \qquad \textit{Ans.}$$

With this result Eqs. 1 and 2 can then be used to find N_m and T_2.

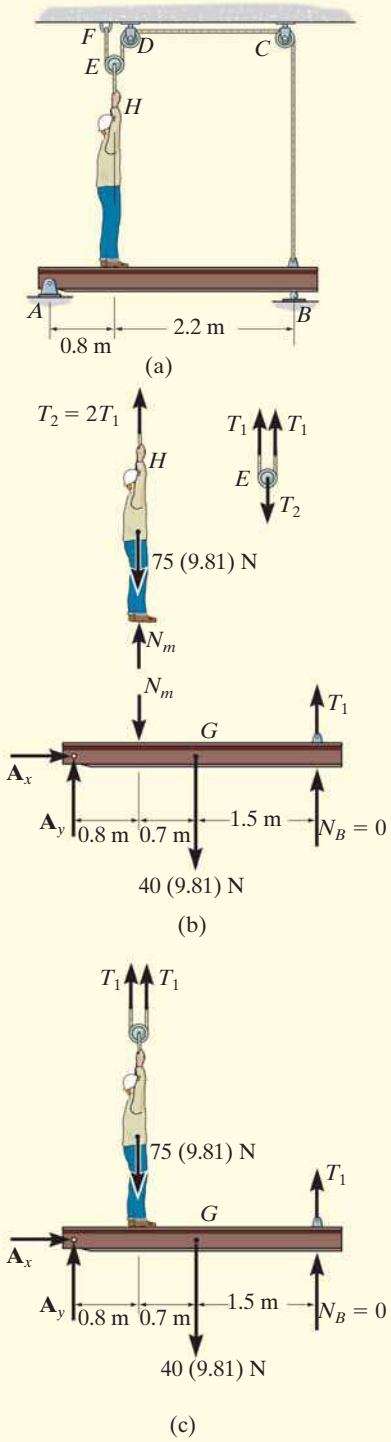

Fig. 6–31

EXAMPLE 6.20

The smooth disk shown in Fig. 6–32*a* is pinned at *D* and has a weight of 20 lb. Neglecting the weights of the other members, determine the horizontal and vertical components of reaction at pins *B* and *D*.

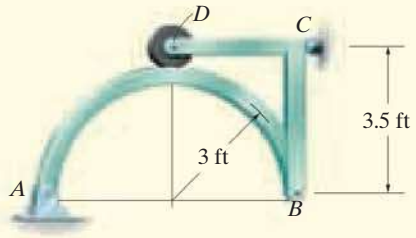

(a)

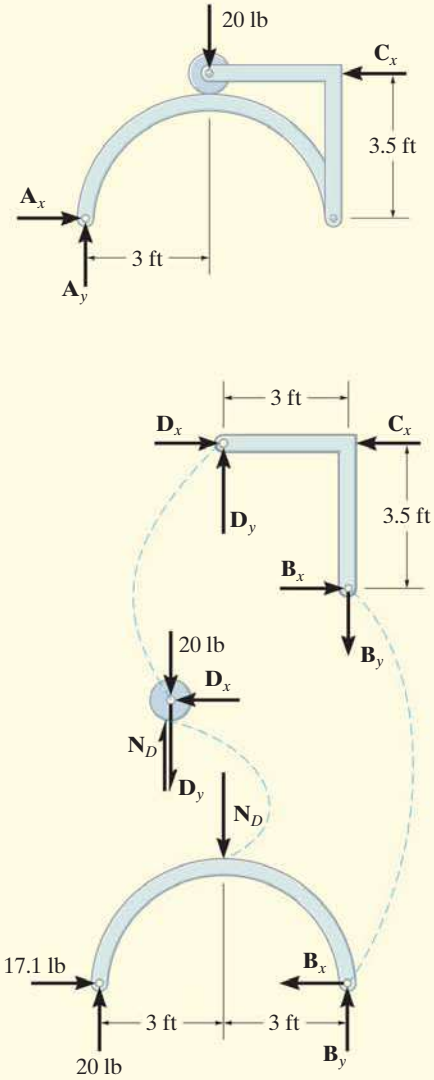

(b)

Fig. 6–32

SOLUTION

Free-Body Diagrams. The free-body diagrams of the entire frame and each of its members are shown in Fig. 6–32*b*.

Equations of Equilibrium. The eight unknowns can of course be obtained by applying the eight equilibrium equations to each member—three to member *AB*, three to member *BCD*, and two to the disk. (Moment equilibrium is automatically satisfied for the disk.) If this is done, however, all the results can be obtained only from a simultaneous solution of some of the equations. (Try it and find out.) To avoid this situation, it is best first to determine the three support reactions on the *entire* frame; then, using these results, the remaining five equilibrium equations can be applied to two other parts in order to solve successively for the other unknowns.

Entire Frame

$\circlearrowleft + \Sigma M_A = 0; \quad -20\text{ lb}(3\text{ ft}) + C_x(3.5\text{ ft}) = 0 \qquad C_x = 17.1\text{ lb}$

$\overset{+}{\rightarrow} \Sigma F_x = 0; \quad A_x - 17.1\text{ lb} = 0 \qquad A_x = 17.1\text{ lb}$

$+\uparrow \Sigma F_y = 0; \quad A_y - 20\text{ lb} = 0 \qquad A_y = 20\text{ lb}$

Member AB

$\overset{+}{\rightarrow} \Sigma F_x = 0; \quad 17.1\text{ lb} - B_x = 0 \qquad B_x = 17.1\text{ lb}$ *Ans.*

$\circlearrowleft + \Sigma M_B = 0; \quad -20\text{ lb}(6\text{ ft}) + N_D(3\text{ ft}) = 0 \qquad N_D = 40\text{ lb}$

$+\uparrow \Sigma F_y = 0; \quad 20\text{ lb} - 40\text{ lb} + B_y = 0 \qquad B_y = 20\text{ lb}$ *Ans.*

Disk

$\overset{+}{\rightarrow} \Sigma F_x = 0; \quad D_x = 0$ *Ans.*

$+\uparrow \Sigma F_y = 0; \quad 40\text{ lb} - 20\text{ lb} - D_y = 0 \qquad D_y = 20\text{ lb}$ *Ans.*

EXAMPLE 6.21

The frame in Fig. 6–33*a* supports the 50-kg cylinder. Determine the horizontal and vertical components of reaction at A and the force at C.

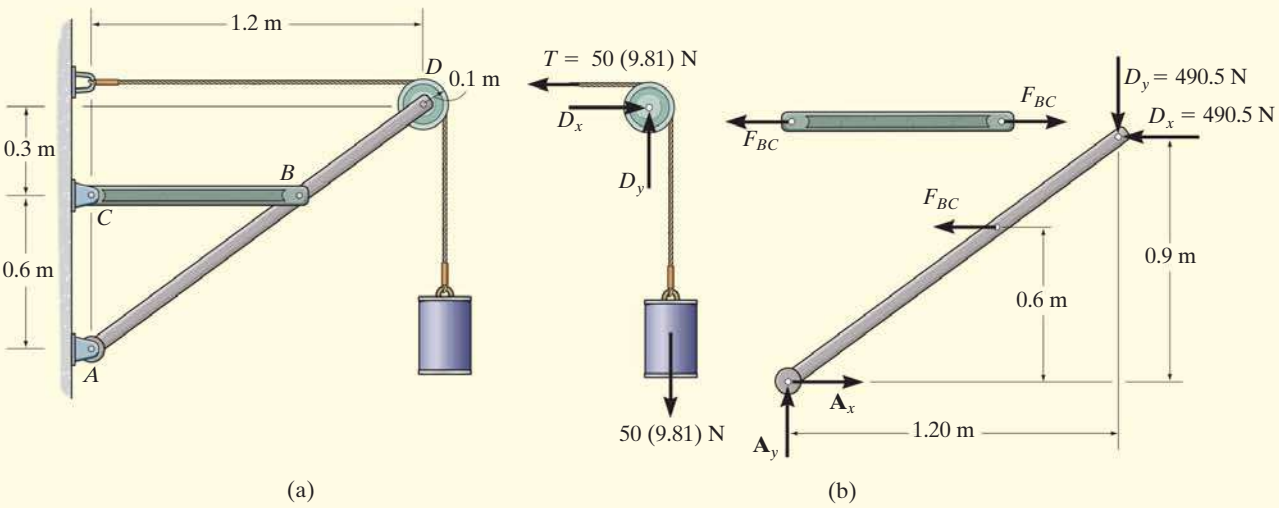

Fig. 6–33

SOLUTION

Free-Body Diagrams. The free-body diagram of pulley D, along with the cylinder and a portion of the cord (a system), is shown in Fig. 6–33*b*. Member BC is a two-force member as indicated by its free-body diagram. The free-body diagram of member ABD is also shown.

Equations of Equilibrium. We will begin by analyzing the equilibrium of the pulley. The moment equation of equilibrium is automatically satisfied with $T = 50(9.81)$ N, and so

$$\overset{+}{\rightarrow} \Sigma F_x = 0; \qquad D_x - 50(9.81)\text{ N} = 0 \quad D_x = 490.5\text{ N}$$

$$+\uparrow \Sigma F_y = 0; \qquad D_y - 50(9.81)\text{ N} = 0 \quad D_y = 490.5\text{ N} \qquad \textit{Ans.}$$

Using these results, F_{BC} can be determined by summing moments about point A on member ABD.

$$\circlearrowleft + \Sigma M_A = 0;\ F_{BC}(0.6\text{ m}) + 490.5\text{ N}(0.9\text{ m}) - 490.5\text{ N}(1.20\text{ m}) = 0$$

$$F_{BC} = 245.25\text{ N} \qquad \textit{Ans.}$$

Now A_x and A_y can be determined by summing forces.

$$\overset{+}{\rightarrow} \Sigma F_x = 0; \quad A_x - 245.25\text{ N} - 490.5\text{ N} = 0 \quad A_x = 736\text{ N} \qquad \textit{Ans.}$$

$$+\uparrow \Sigma F_y = 0; \qquad A_y - 490.5\text{ N} = 0 \quad A_y = 490.5\text{ N} \qquad \textit{Ans.}$$

EXAMPLE 6.22

Determine the force the pins at A and B exert on the two-member frame shown in Fig. 6–34*a*.

SOLUTION I

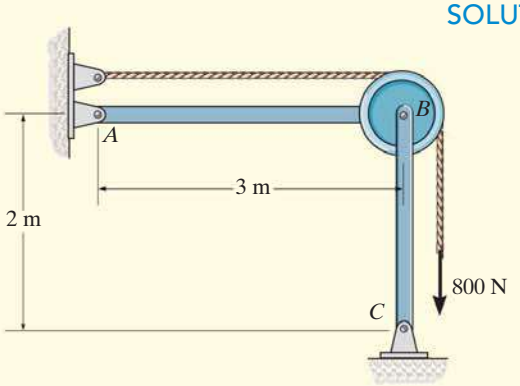

(a)

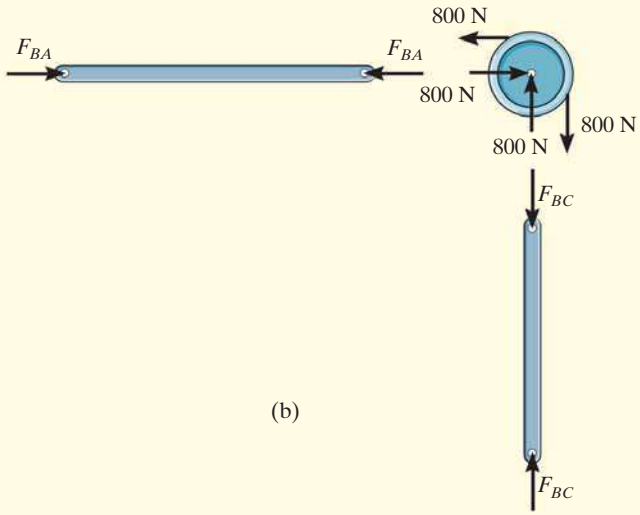

(b)

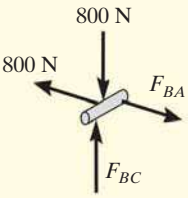

Pin B

(c)

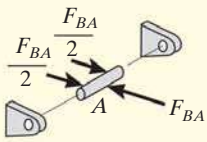

Pin A

(d)

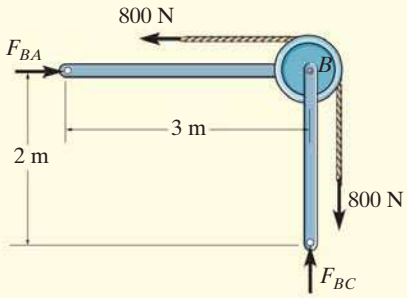

(e)

Fig. 6–34

Free-Body Diagrams. By inspection AB and BC are two-force members. Their free-body diagrams, along with that of the pulley, are shown in Fig. 6–34*b*. In order to solve this problem we must also include the free-body diagram of the pin at B because this pin connects all *three members* together, Fig. 6–34*c*.

Equations of Equilibrium: Apply the equations of force equilibrium to pin B.

$$\overset{+}{\rightarrow}\Sigma F_x = 0; \qquad F_{BA} - 800\text{ N} = 0; \qquad F_{BA} = 800\text{ N} \qquad \textit{Ans.}$$

$$+\uparrow\Sigma F_y = 0; \qquad F_{BC} - 800\text{ N} = 0; \qquad F_{BC} = 800\text{ N} \qquad \textit{Ans.}$$

NOTE: The free-body diagram of the pin at A, Fig. 6–34*d*, indicates how the force F_{AB} is balanced by the force $(F_{AB}/2)$ exerted on the pin by each of the two pin leaves.

SOLUTION II

Free-Body Diagram. If we realize that AB and BC are two-force members, then the free-body diagram of the *entire frame* produces an easier solution, Fig. 6–34*e*. The force equations of equilibrium are the same as those above. Note that moment equilibrium will be satisfied, regardless of the radius of the pulley.

PRELIMINARY PROBLEMS

P6–3. In each case, identify any two-force members, and then draw the free-body diagrams of each member of the frame.

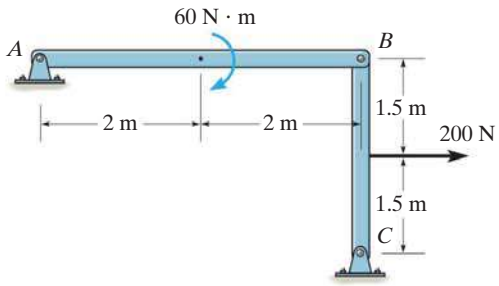

(a)

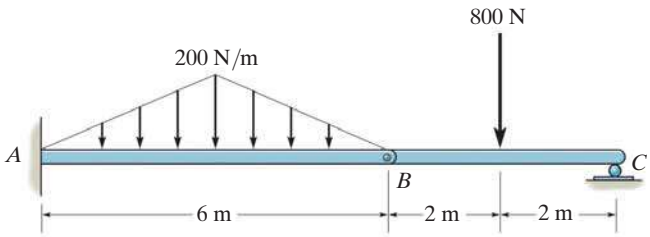

(d)

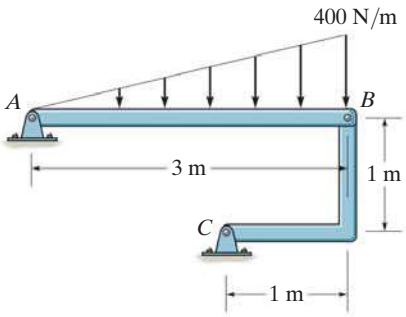

(b)

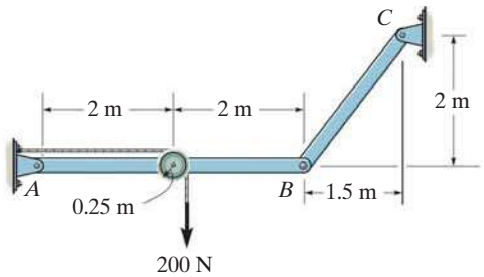

(e)

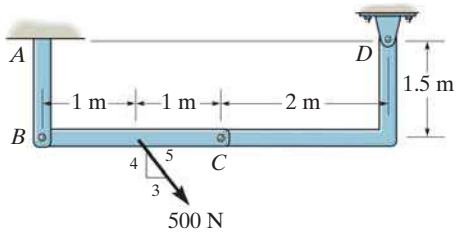

(c)

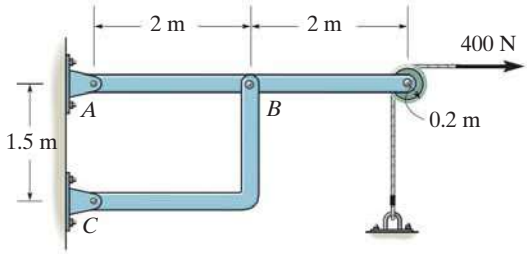

(f)

Prob. P6–3

FUNDAMENTAL PROBLEMS

All problem solutions must include FBDs.

F6–13. Determine the force P needed to hold the 60-lb weight in equilibrium.

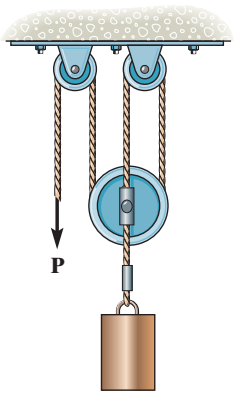

Prob. F6–13

F6–14. Determine the horizontal and vertical components of reaction at pin C.

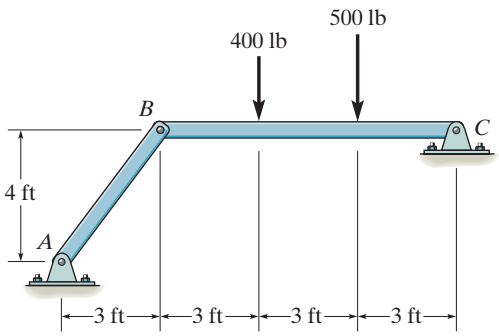

Prob. F6–14

F6–15. If a 100-N force is applied to the handles of the pliers, determine the clamping force exerted on the smooth pipe B and the magnitude of the resultant force that one of the members exerts on pin A.

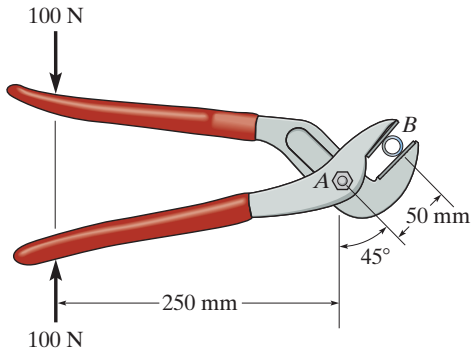

Prob. F6–15

F6–16. Determine the horizontal and vertical components of reaction at pin C.

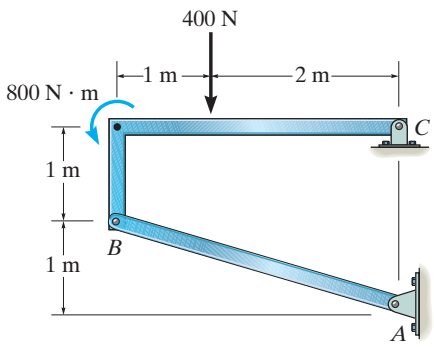

Prob. F6–16

F6–17. Determine the normal force that the 100-lb plate A exerts on the 30-lb plate B.

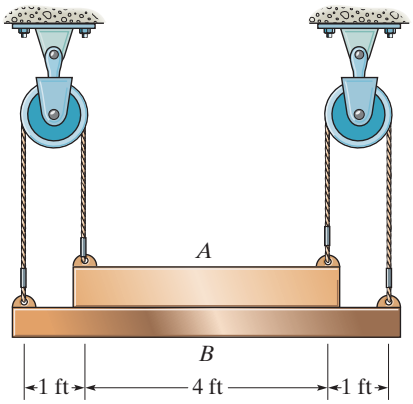

Prob. F6–17

F6–18. Determine the force P needed to lift the load. Also, determine the proper placement x of the hook for equilibrium. Neglect the weight of the beam.

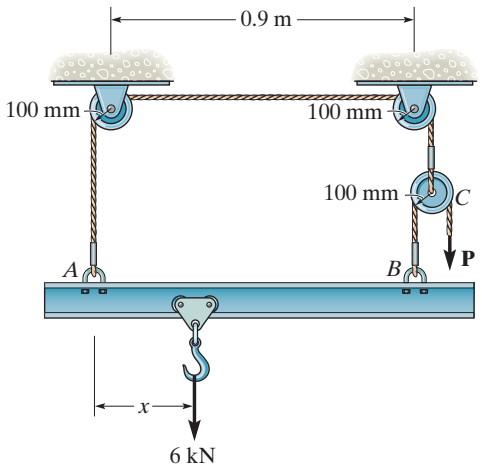

Prob. F6–18

F6–19. Determine the components of reaction at A and B.

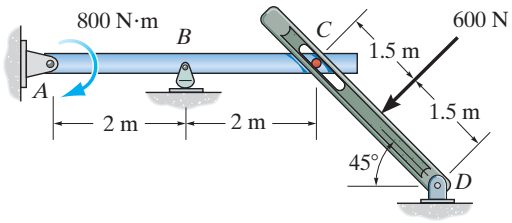

Prob. F6–19

F6–20. Determine the reactions at D.

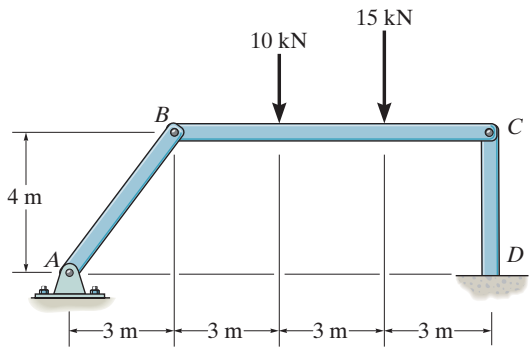

Prob. F6–20

F6–21. Determine the components of reaction at A and C.

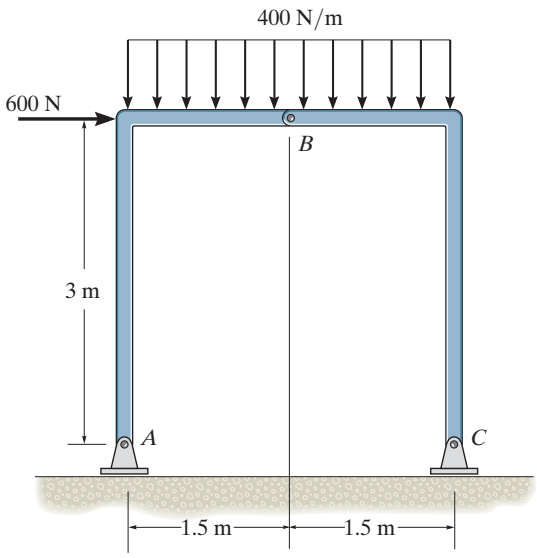

Prob. F6–21

F6–22. Determine the components of reaction at C.

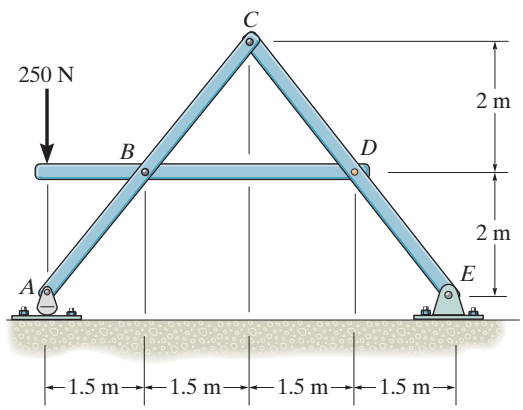

Prob. F6–22

F6–23. Determine the components of reaction at E.

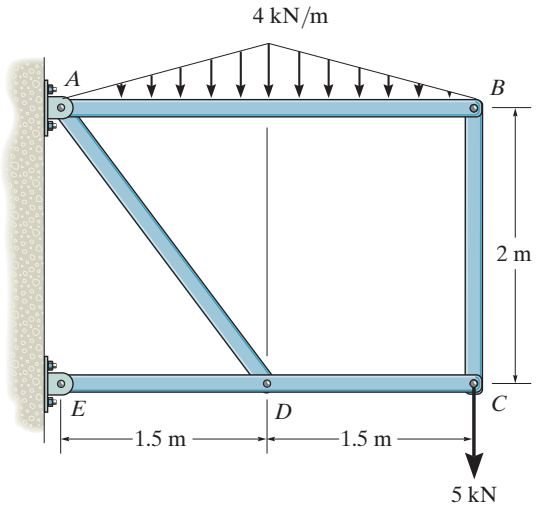

Prob. F6–23

F6–24. Determine the components of reaction at D and the components of reaction the pin at A exerts on member BA.

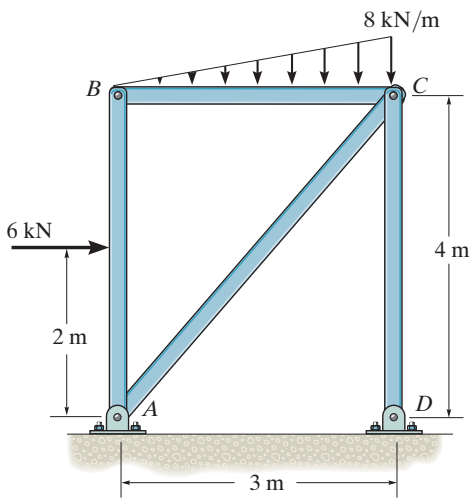

Prob. F6–24

PROBLEMS

All problem solutions must include FBDs.

6–61. Determine the force **P** required to hold the 100-lb weight in equilibrium.

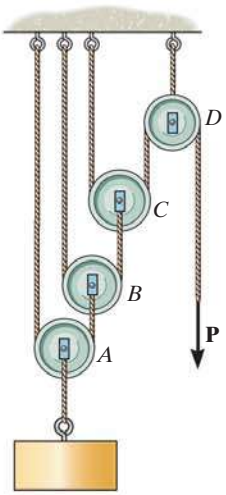

Prob. 6–61

6–62. In each case, determine the force **P** required to maintain equilibrium. The block weighs 100 lb.

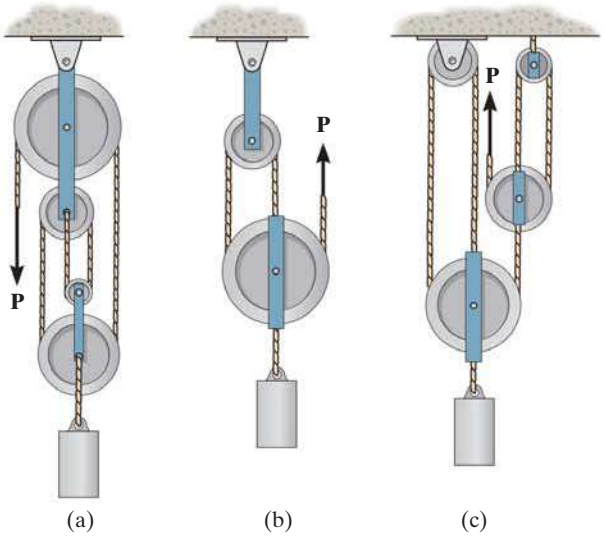

Prob. 6–62

6–63. Determine the force **P** required to hold the 50-kg mass in equilibrium.

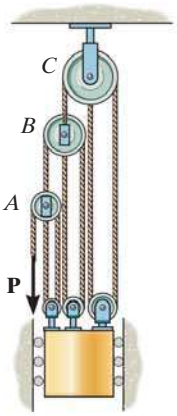

Prob. 6–63

***6–64.** Determine the force **P** required to hold the 150-kg crate in equilibrium.

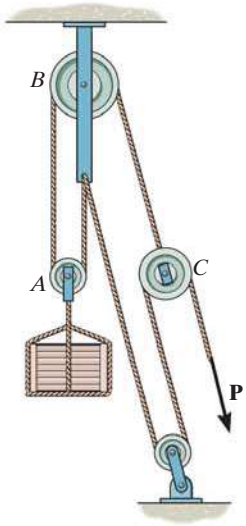

Prob. 6–64

6–65. Determine the horizontal and vertical components of force that pins A and B exert on the frame.

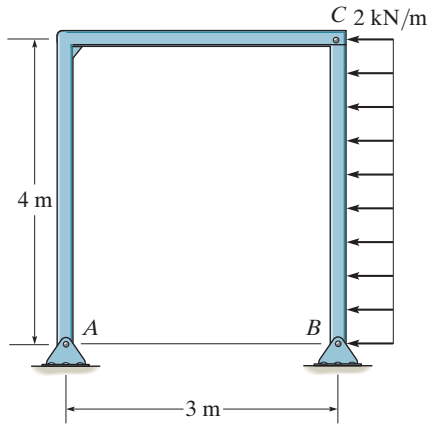

Prob. 6–65

6–66. Determine the horizontal and vertical components of force at pins A and D.

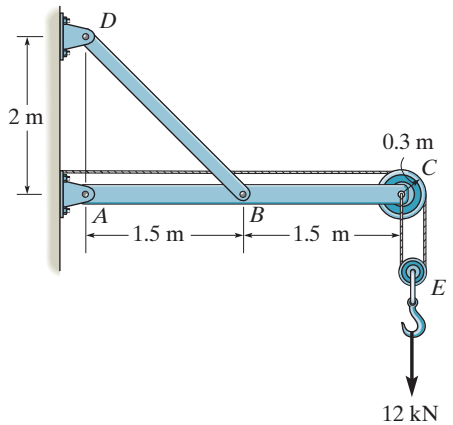

Prob. 6–66

6–67. Determine the force that the smooth roller C exerts on member AB. Also, what are the horizontal and vertical components of reaction at pin A? Neglect the weight of the frame and roller.

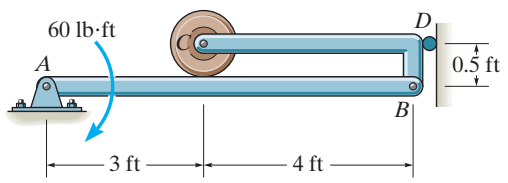

Prob. 6–67

***6–68.** The bridge frame consists of three segments which can be considered pinned at A, D, and E, rocker supported at C and F, and roller supported at B. Determine the horizontal and vertical components of reaction at all these supports due to the loading shown.

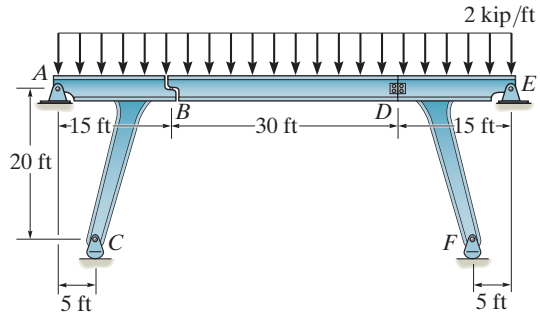

Prob. 6–68

6–69. Determine the reactions at supports A and B.

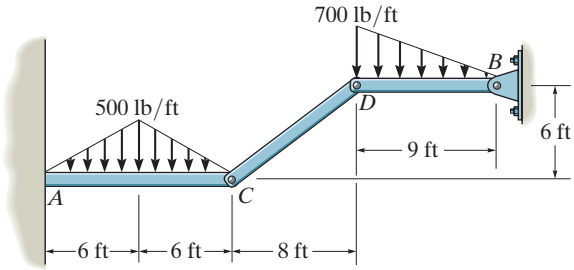

Prob. 6–69

6–70. Determine the horizontal and vertical components of force at pins B and C. The suspended cylinder has a mass of 75 kg.

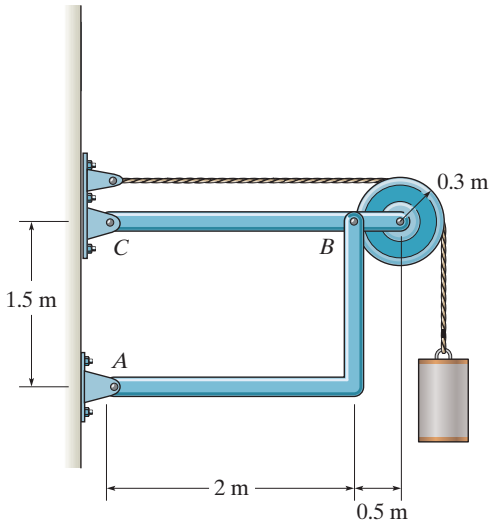

Prob. 6–70

6–71. Determine the reactions at the supports A, C, and E of the compound beam.

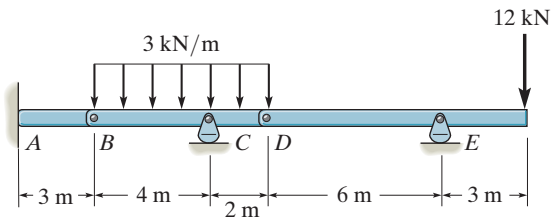

Prob. 6–71

***6–72.** Determine the resultant force at pins A, B, and C on the three-member frame.

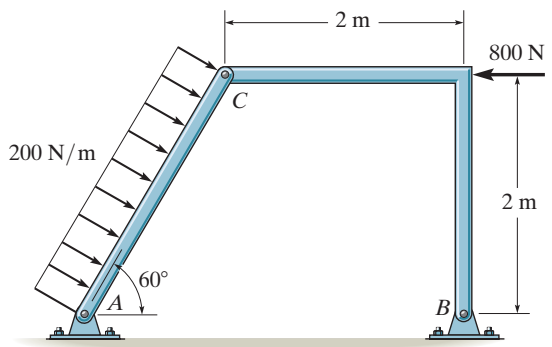

Prob. 6–72

6–73. Determine the reactions at the supports at A, E, and B of the compound beam.

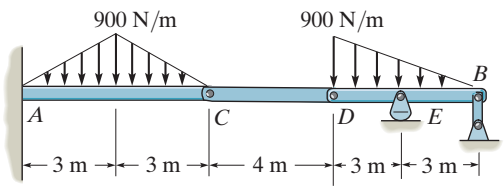

Prob. 6–73

6–74. The wall crane supports a load of 700 lb. Determine the horizontal and vertical components of reaction at the pins A and D. Also, what is the force in the cable at the winch W?

6–75. The wall crane supports a load of 700 lb. Determine the horizontal and vertical components of reaction at the pins A and D. Also, what is the force in the cable at the winch W? The jib ABC has a weight of 100 lb and member BD has a weight of 40 lb. Each member is uniform and has a center of gravity at its center.

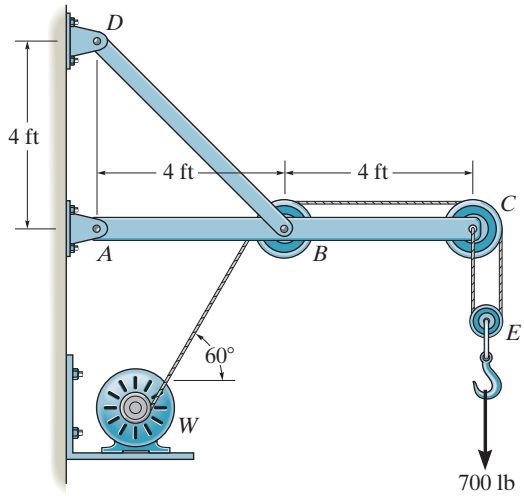

Probs. 6–74/75

***6–76.** Determine the horizontal and vertical components of force which the pins at A and B exert on the frame.

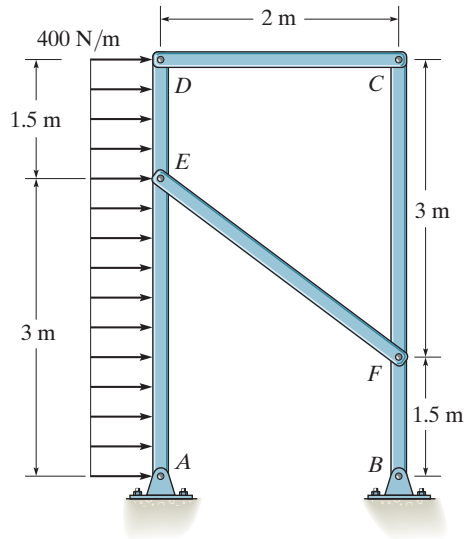

Prob. 6–76

Chapter 8

(© Pavel Polkovnikov/Shutterstock)

The effective design of this brake requires that it resist the frictional forces developed between it and the wheel. In this chapter we will study dry friction, and show how to analyze friction forces for various engineering applications.

Friction

CHAPTER OBJECTIVES

- To introduce the concept of dry friction and show how to analyze the equilibrium of rigid bodies subjected to this force.
- To present specific applications of frictional force analysis on wedges, screws, belts, and bearings.
- To investigate the concept of rolling resistance.

8.1 Characteristics of Dry Friction

Friction is a force that resists the movement of two contacting surfaces that slide relative to one another. This force always acts *tangent* to the surface at the points of contact and is directed so as to oppose the possible or existing motion between the surfaces.

In this chapter, we will study the effects of ***dry friction***, which is sometimes called *Coulomb friction* since its characteristics were studied extensively by the French physicist Charles-Augustin de Coulomb in 1781. Dry friction occurs between the contacting surfaces of bodies when there is no lubricating fluid.*

The heat generated by the abrasive action of friction can be noticed when using this grinder to sharpen a metal blade. (© Russell C. Hibbeler)

*Another type of friction, called fluid friction, is studied in fluid mechanics.

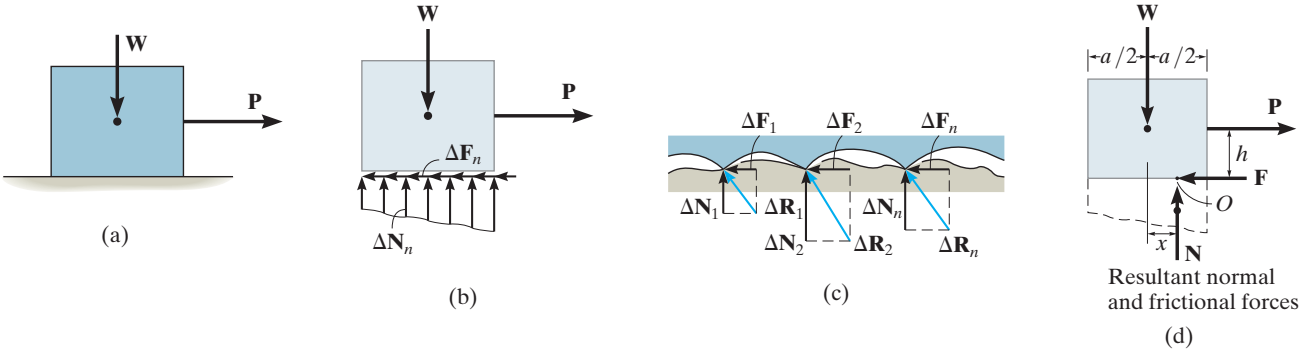

Fig. 8–1

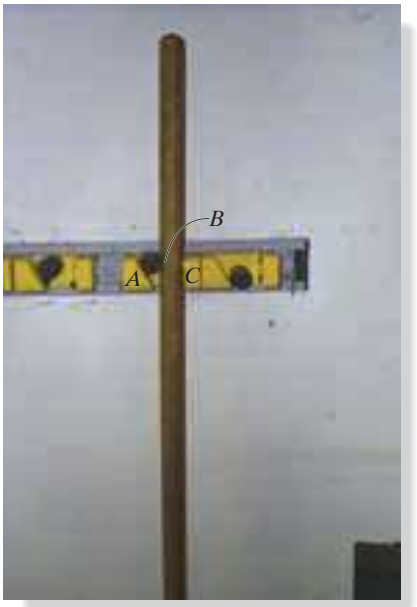

Regardless of the weight of the rake or shovel that is suspended, the device has been designed so that the small roller holds the handle in equilibrium due to frictional forces that develop at the points of contact, A, B, C. (© Russell C. Hibbeler)

Theory of Dry Friction. The theory of dry friction can be explained by considering the effects caused by pulling horizontally on a block of uniform weight **W** which is resting on a rough horizontal surface that is *nonrigid or deformable,* Fig. 8–1*a*. The upper portion of the block, however, can be considered rigid. As shown on the free-body diagram of the block, Fig. 8–1*b*, the floor exerts an uneven *distribution* of both *normal force* $\Delta \mathbf{N}_n$ and *frictional force* $\Delta \mathbf{F}_n$ along the contacting surface. For equilibrium, the normal forces must act *upward* to balance the block's weight **W**, and the frictional forces act to the left to prevent the applied force **P** from moving the block to the right. Close examination of the contacting surfaces between the floor and block reveals how these frictional and normal forces develop, Fig. 8–1*c*. It can be seen that many microscopic irregularities exist between the two surfaces and, as a result, reactive forces $\Delta \mathbf{R}_n$ are developed at each point of contact.* As shown, each reactive force contributes both a frictional component $\Delta \mathbf{F}_n$ and a normal component $\Delta \mathbf{N}_n$.

Equilibrium. The effect of the *distributed* normal and frictional loadings is indicated by their *resultants* **N** and **F** on the free-body diagram, Fig. 8–1*d*. Notice that **N** acts a distance x to the right of the line of action of **W**, Fig. 8–1*d*. This location, which coincides with the centroid or geometric center of the normal force distribution in Fig. 8–1*b*, is necessary in order to balance the "tipping effect" caused by **P**. For example, if **P** is applied at a height h from the surface, Fig. 8–1*d*, then moment equilibrium about point O is satisfied if $Wx = Ph$ or $x = Ph/W$.

*Besides mechanical interactions as explained here, which is referred to as a classical approach, a detailed treatment of the nature of frictional forces must also include the effects of temperature, density, cleanliness, and atomic or molecular attraction between the contacting surfaces. See J. Krim, *Scientific American*, October, 1996.

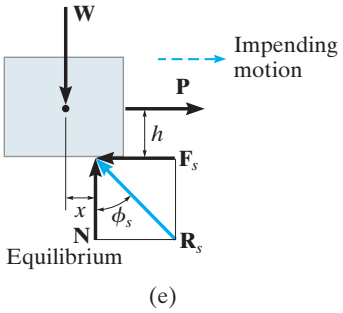

Fig. 8–1 (cont.)

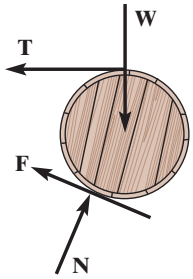

Some objects, such as this barrel, may not be on the verge of slipping, and therefore the friction force **F** must be determined strictly from the equations of equilibrium. (© Russell C. Hibbeler)

Impending Motion. In cases where the surfaces of contact are rather "slippery," the frictional force **F** may *not* be great enough to balance **P**, and consequently the block will tend to slip. In other words, as P is slowly increased, F correspondingly increases until it attains a certain *maximum value* F_s, called the *limiting static frictional force*, Fig. 8–1*e*. When this value is reached, the block is in *unstable equilibrium* since any further increase in P will cause the block to move. Experimentally, it has been determined that this limiting static frictional force F_s is *directly proportional* to the resultant normal force N. Expressed mathematically,

$$F_s = \mu_s N \tag{8–1}$$

where the constant of proportionality, μ_s (mu "sub" s), is called the ***coefficient of static friction***.

Thus, when the block is on the *verge of sliding*, the normal force **N** and frictional force $\mathbf{F}_s$ combine to create a resultant $\mathbf{R}_s$, Fig. 8–1*e*. The angle ϕ_s (phi "sub" s) that $\mathbf{R}_s$ makes with **N** is called the ***angle of static friction***. From the figure,

$$\phi_s = \tan^{-1}\left(\frac{F_s}{N}\right) = \tan^{-1}\left(\frac{\mu_s N}{N}\right) = \tan^{-1}\mu_s$$

Typical values for μ_s are given in Table 8–1. Note that these values can vary since experimental testing was done under variable conditions of roughness and cleanliness of the contacting surfaces. For applications, therefore, it is important that both caution and judgment be exercised when selecting a coefficient of friction for a given set of conditions. When a more accurate calculation of F_s is required, the coefficient of friction should be determined directly by an experiment that involves the two materials to be used.

Table 8–1 Typical Values for μ_s

Contact Materials	Coefficient of Static Friction (μ_s)
Metal on ice	0.03–0.05
Wood on wood	0.30–0.70
Leather on wood	0.20–0.50
Leather on metal	0.30–0.60
Copper on copper	0.74–1.21

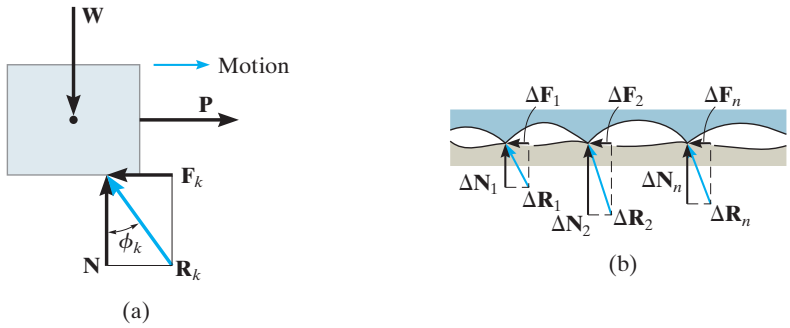

Fig. 8–2

Motion. If the magnitude of **P** acting on the block is increased so that it becomes slightly greater than F_s, the frictional force at the contacting surface will drop to a smaller value F_k, called the *kinetic frictional force*. The block will begin to slide with increasing speed, Fig. 8–2*a*. As this occurs, the block will "ride" on top of these peaks at the points of contact, as shown in Fig. 8–2*b*. The continued breakdown of the surface is the dominant mechanism creating kinetic friction.

Experiments with sliding blocks indicate that the magnitude of the kinetic friction force is directly proportional to the magnitude of the resultant normal force, expressed mathematically as

$$\boxed{F_k = \mu_k N} \tag{8–2}$$

Here the constant of proportionality, μ_k, is called the ***coefficient of kinetic friction***. Typical values for μ_k are approximately 25 percent *smaller* than those listed in Table 8–1 for μ_s.

As shown in Fig. 8–2*a*, in this case, the resultant force at the surface of contact, $\mathbf{R}_k$, has a line of action defined by ϕ_k. This angle is referred to as the ***angle of kinetic friction***, where

$$\phi_k = \tan^{-1}\left(\frac{F_k}{N}\right) = \tan^{-1}\left(\frac{\mu_k N}{N}\right) = \tan^{-1}\mu_k$$

By comparison, $\phi_s \geq \phi_k$.

The above effects regarding friction can be summarized by referring to the graph in Fig. 8–3, which shows the variation of the frictional force F versus the applied load P. Here the frictional force is categorized in three different ways:

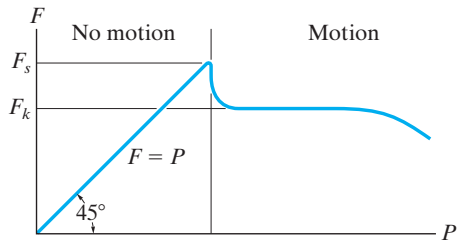

Fig. 8–3

- F is a *static frictional force* if equilibrium is maintained.
- F is a *limiting static frictional force* F_s when it reaches a maximum value needed to maintain equilibrium.
- F is a *kinetic frictional force* F_k when sliding occurs at the contacting surface.

Notice also from the graph that for very large values of P or for high speeds, aerodynamic effects will cause F_k and likewise μ_k to begin to decrease.

Characteristics of Dry Friction. As a result of *experiments* that pertain to the foregoing discussion, we can state the following rules which apply to bodies subjected to dry friction.

- The frictional force acts *tangent* to the contacting surfaces in a direction *opposed* to the *motion* or tendency for motion of one surface relative to another.
- The maximum static frictional force F_s that can be developed is independent of the area of contact, provided the normal pressure is not very low nor great enough to severely deform or crush the contacting surfaces of the bodies.
- The maximum static frictional force is generally greater than the kinetic frictional force for any two surfaces of contact. However, if one of the bodies is moving with a *very low velocity* over the surface of another, F_k becomes approximately equal to F_s, i.e., $\mu_s \approx \mu_k$.
- When *slipping* at the surface of contact is *about to occur*, the maximum static frictional force is proportional to the normal force, such that $F_s = \mu_s N$.
- When *slipping* at the surface of contact is *occurring*, the kinetic frictional force is proportional to the normal force, such that $F_k = \mu_k N$.

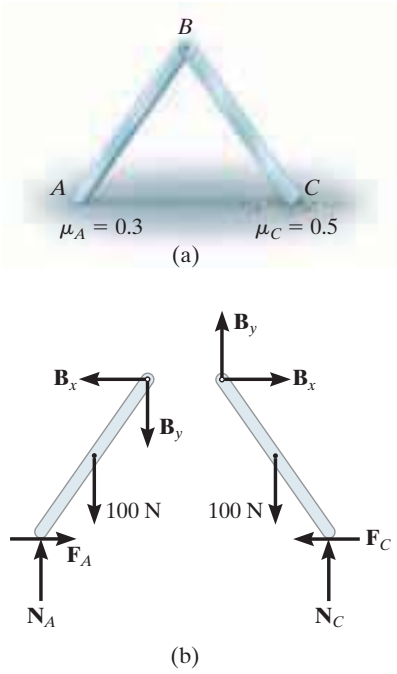

Fig. 8–4

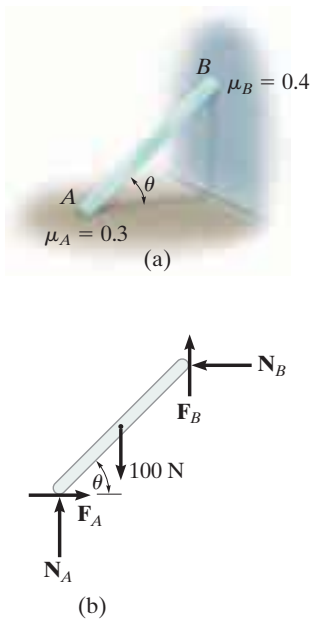

Fig. 8–5

8.2 Problems Involving Dry Friction

If a rigid body is in equilibrium when it is subjected to a system of forces that includes the effect of friction, the force system must satisfy not only the equations of equilibrium but *also* the laws that govern the frictional forces.

Types of Friction Problems. In general, there are three types of static problems involving dry friction. They can easily be classified once free-body diagrams are drawn and the total number of unknowns are identified and compared with the total number of available equilibrium equations.

No Apparent Impending Motion. Problems in this category are strictly equilibrium problems, which require the number of unknowns to be *equal* to the number of available equilibrium equations. Once the frictional forces are determined from the solution, however, their numerical values must be checked to be sure they satisfy the inequality $F \leq \mu_s N$; otherwise, slipping will occur and the body will not remain in equilibrium. A problem of this type is shown in Fig. 8–4*a*. Here we must determine the frictional forces at A and C to check if the equilibrium position of the two-member frame can be maintained. If the bars are uniform and have known weights of 100 N each, then the free-body diagrams are as shown in Fig. 8–4*b*. There are six unknown force components which can be determined *strictly* from the six equilibrium equations (three for each member). Once F_A, N_A, F_C, and N_C are determined, then the bars will remain in equilibrium provided $F_A \leq 0.3N_A$ and $F_C \leq 0.5N_C$ are satisfied.

Impending Motion at All Points of Contact. In this case the total number of unknowns will *equal* the total number of available equilibrium equations *plus* the total number of available frictional equations, $F = \mu N$. When *motion is impending* at the points of contact, then $F_s = \mu_s N$; whereas if the body is *slipping*, then $F_k = \mu_k N$. For example, consider the problem of finding the smallest angle θ at which the 100-N bar in Fig. 8–5*a* can be placed against the wall without slipping. The free-body diagram is shown in Fig. 8–5*b*. Here the *five* unknowns are determined from the *three* equilibrium equations and *two* static frictional equations which apply at *both* points of contact, so that $F_A = 0.3N_A$ and $F_B = 0.4N_B$.

Impending Motion at Some Points of Contact. Here the number of unknowns will be *less* than the number of available equilibrium equations plus the number of available frictional equations or conditional equations for tipping. As a result, several possibilities for motion or impending motion will exist and the problem will involve a determination of the kind of motion which actually occurs. For example, consider the two-member frame in Fig. 8–6*a*. In this problem we wish to determine the horizontal force P needed to cause movement. If each member has a weight of 100 N, then the free-body diagrams are as shown in Fig. 8–6*b*. There are *seven* unknowns. For a unique solution we must satisfy the *six* equilibrium equations (three for each member) and only *one* of two possible static frictional equations. This means that as P increases it will either cause slipping at A and no slipping at C, so that $F_A = 0.3N_A$ and $F_C \leq 0.5N_C$; or slipping occurs at C and no slipping at A, in which case $F_C = 0.5N_C$ and $F_A \leq 0.3N_A$. The actual situation can be determined by calculating P for each case and then choosing the case for which P is *smaller*. If in both cases the *same value* for P is calculated, which would be highly improbable, then slipping at both points occurs simultaneously; i.e., the *seven unknowns* would satisfy *eight equations*.

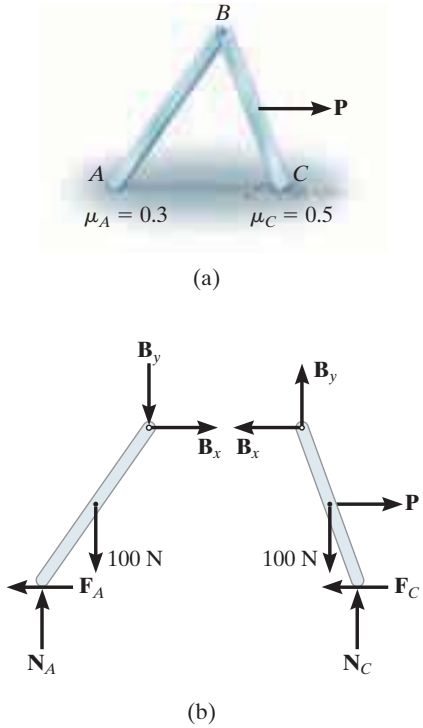

Fig. 8–6

Equilibrium Versus Frictional Equations. Whenever we solve a problem such as the one in Fig. 8–4, where the friction force F is to be an "equilibrium force" and satisfies the inequality $F < \mu_s N$, then we can assume the sense of direction of F on the free-body diagram. The correct sense is made known *after* solving the equations of equilibrium for F. If F is a negative scalar the sense of $\mathbf{F}$ is the reverse of that which was assumed. This convenience of *assuming* the sense of $\mathbf{F}$ is possible because the equilibrium equations equate to zero the *components of vectors* acting in the *same direction*. However, in cases where the frictional equation $F = \mu N$ is used in the solution of a problem, as in the case shown in Fig. 8–5, then the convenience of *assuming* the sense of $\mathbf{F}$ is *lost*, since the frictional equation relates only the *magnitudes* of two *perpendicular* vectors. Consequently, $\mathbf{F}$ *must always* be shown acting with its *correct sense* on the free-body diagram, *whenever* the frictional equation is used for the solution of a problem.

Depending upon where the man pushes on the crate, it will either tip or slip. (© Russell C. Hibbeler)

Important Points

- Friction is a tangential force that resists the movement of one surface relative to another.
- If no sliding occurs, the maximum value for the friction force is equal to the product of the coefficient of static friction and the normal force at the surface.
- If sliding occurs at a slow speed, then the friction force is the product of the coefficient of kinetic friction and the normal force at the surface.
- There are three types of static friction problems. Each of these problems is analyzed by first drawing the necessary free-body diagrams, and then applying the equations of equilibrium, while satisfying the conditions of friction or the possibility of tipping.

Procedure for Analysis

Equilibrium problems involving dry friction can be solved using the following procedure.

Free-Body Diagrams.

- Draw the necessary free-body diagrams, and unless it is stated in the problem that impending motion or slipping occurs, *always* show the frictional forces as unknowns (i.e., *do not assume* $F = \mu N$).

- Determine the number of unknowns and compare this with the number of available equilibrium equations.

- If there are more unknowns than equations of equilibrium, it will be necessary to apply the frictional equation at some, if not all, points of contact to obtain the extra equations needed for a complete solution.

- If the equation $F = \mu N$ is to be used, it will be necessary to show $\mathbf{F}$ acting in the correct sense of direction on the free-body diagram.

Equations of Equilibrium and Friction.

- Apply the equations of equilibrium and the necessary frictional equations (or conditional equations if tipping is possible) and solve for the unknowns.

- If the problem involves a three-dimensional force system such that it becomes difficult to obtain the force components or the necessary moment arms, apply the equations of equilibrium using Cartesian vectors.

The uniform crate shown in Fig. 8–7*a* has a mass of 20 kg. If a force $P = 80$ N is applied to the crate, determine if it remains in equilibrium. The coefficient of static friction is $\mu_s = 0.3$.

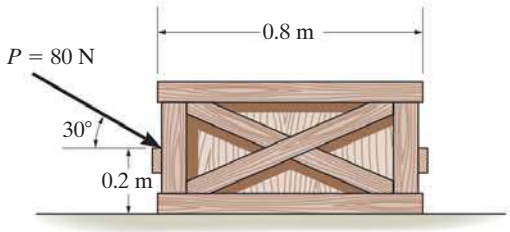

(a)

Fig. 8–7

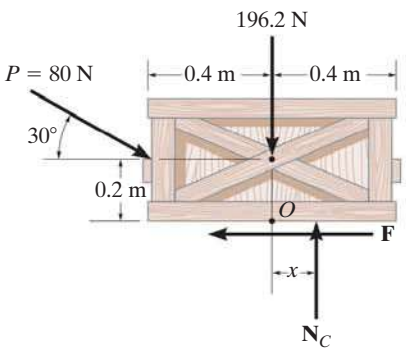

(b)

SOLUTION

Free-Body Diagram. As shown in Fig. 8–7*b*, the *resultant* normal force $\mathbf{N}_C$ must act a distance x from the crate's center line in order to counteract the tipping effect caused by **P**. There are *three unknowns,* F, N_C, and x, which can be determined strictly from the *three* equations of equilibrium.

Equations of Equilibrium.

$$\overset{+}{\rightarrow} \Sigma F_x = 0; \qquad 80 \cos 30° \text{ N} - F = 0$$

$$+\uparrow \Sigma F_y = 0; \qquad -80 \sin 30° \text{ N} + N_C - 196.2 \text{ N} = 0$$

$$\circlearrowleft + \Sigma M_O = 0; \quad 80 \sin 30° \text{ N}(0.4 \text{ m}) - 80 \cos 30° \text{ N}(0.2 \text{ m}) + N_C(x) = 0$$

Solving,

$$F = 69.3 \text{ N}$$
$$N_C = 236.2 \text{ N}$$
$$x = -0.00908 \text{ m} = -9.08 \text{ mm}$$

Since x is negative it indicates the *resultant* normal force acts (slightly) to the *left* of the crate's center line. No tipping will occur since $x < 0.4$ m. Also, the *maximum* frictional force which can be developed at the surface of contact is $F_{max} = \mu_s N_C = 0.3(236.2 \text{ N}) = 70.9$ N. Since $F = 69.3 \text{ N} < 70.9$ N, the crate will *not slip*, although it is very close to doing so.

EXAMPLE 8.2

It is observed that when the bed of the dump truck is raised to an angle of $\theta = 25°$ the vending machines will begin to slide off the bed, Fig. 8–8*a*. Determine the static coefficient of friction between a vending machine and the surface of the truckbed.

(a)

(© Russell C. Hibbeler)

SOLUTION

An idealized model of a vending machine resting on the truckbed is shown in Fig. 8–8*b*. The dimensions have been measured and the center of gravity has been located. We will assume that the vending machine weighs W.

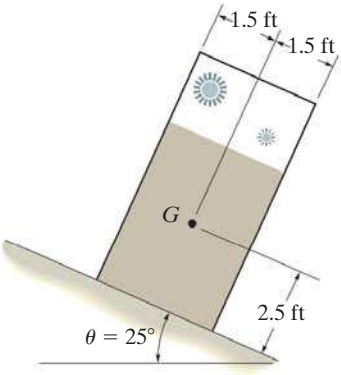

(b)

Free-Body Diagram. As shown in Fig. 8–8*c*, the dimension x is used to locate the position of the resultant normal force **N**. There are four unknowns, N, F, μ_s, and x.

Equations of Equilibrium.

$$+\searrow \Sigma F_x = 0; \qquad W \sin 25° - F = 0 \qquad (1)$$

$$+\nearrow \Sigma F_y = 0; \qquad N - W \cos 25° = 0 \qquad (2)$$

$$\circlearrowleft + \Sigma M_O = 0; \qquad -W \sin 25°(2.5 \text{ ft}) + W \cos 25°(x) = 0 \qquad (3)$$

Since slipping impends at $\theta = 25°$, using Eqs. 1 and 2, we have

$$F_s = \mu_s N; \qquad W \sin 25° = \mu_s(W \cos 25°)$$

$$\mu_s = \tan 25° = 0.466 \qquad \textit{Ans.}$$

The angle of $\theta = 25°$ is referred to as the ***angle of repose***, and by comparison, it is equal to the angle of static friction, $\theta = \phi_s$. Notice from the calculation that θ is independent of the weight of the vending machine, and so knowing θ provides a convenient method for determining the coefficient of static friction.

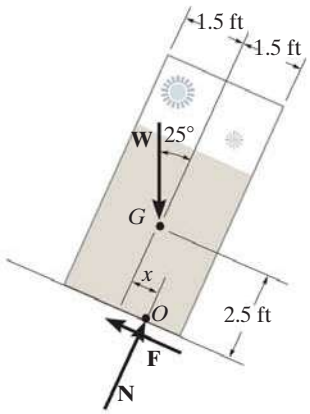

(c)

Fig. 8–8

NOTE: From Eq. 3, we find $x = 1.17$ ft. Since $1.17 \text{ ft} < 1.5 \text{ ft}$, indeed the vending machine will slip before it can tip as observed in Fig. 8–8*a*.

The uniform 10-kg ladder in Fig. 8–9*a* rests against the smooth wall at B, and the end A rests on the rough horizontal plane for which the coefficient of static friction is $\mu_s = 0.3$. Determine the angle of inclination θ of the ladder and the normal reaction at B if the ladder is on the verge of slipping.

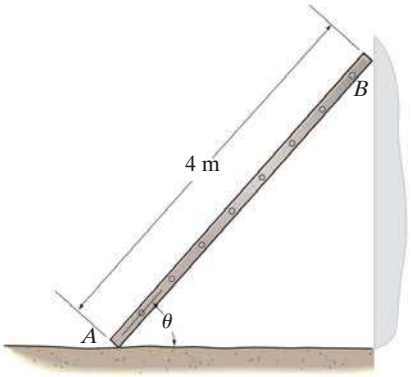

(a)

Fig. 8–9

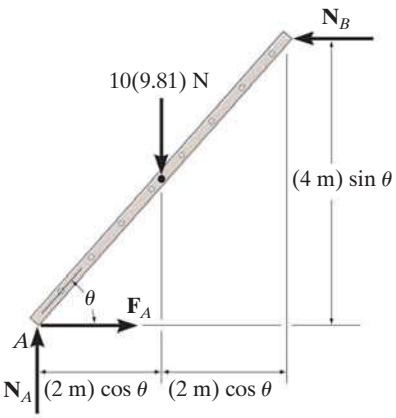

(b)

SOLUTION

Free-Body Diagram. As shown on the free-body diagram, Fig. 8–9*b*, the frictional force $\mathbf{F}_A$ must act to the right since impending motion at A is to the left.

Equations of Equilibrium and Friction. Since the ladder is on the verge of slipping, then $F_A = \mu_s N_A = 0.3N_A$. By inspection, N_A can be obtained directly.

$$+\uparrow \Sigma F_y = 0; \qquad N_A - 10(9.81)\text{ N} = 0 \qquad N_A = 98.1\text{ N}$$

Using this result, $F_A = 0.3(98.1\text{ N}) = 29.43\text{ N}$. Now N_B can be found.

$$\overset{+}{\rightarrow} \Sigma F_x = 0; \qquad 29.43\text{ N} - N_B = 0$$

$$N_B = 29.43\text{ N} = 29.4\text{ N} \qquad \textit{Ans.}$$

Finally, the angle θ can be determined by summing moments about point A.

$$\circlearrowleft + \Sigma M_A = 0; \qquad (29.43\text{ N})(4\text{ m})\sin\theta - [10(9.81)\text{ N}](2\text{ m})\cos\theta = 0$$

$$\frac{\sin\theta}{\cos\theta} = \tan\theta = 1.6667$$

$$\theta = 59.04° = 59.0° \qquad \textit{Ans.}$$

EXAMPLE 8.4

Beam AB is subjected to a uniform load of 200 N/m and is supported at B by post BC, Fig. 8–10a. If the coefficients of static friction at B and C are $\mu_B = 0.2$ and $\mu_C = 0.5$, determine the force **P** needed to pull the post out from under the beam. Neglect the weight of the members and the thickness of the beam.

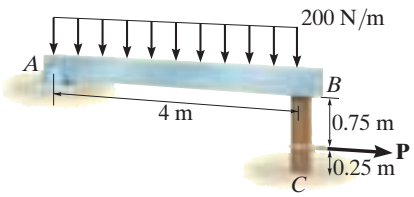

(a)

SOLUTION

Free-Body Diagrams. The free-body diagram of the beam is shown in Fig. 8–10b. Applying $\Sigma M_A = 0$, we obtain $N_B = 400$ N. This result is shown on the free-body diagram of the post, Fig. 8–10c. Referring to this member, the *four* unknowns F_B, P, F_C, and N_C are determined from the *three* equations of equilibrium and *one* frictional equation applied either at B or C.

Equations of Equilibrium and Friction.

$$\overset{+}{\rightarrow} \Sigma F_x = 0; \qquad P - F_B - F_C = 0 \qquad (1)$$

$$+\uparrow \Sigma F_y = 0; \qquad N_C - 400\text{ N} = 0 \qquad (2)$$

$$\circlearrowleft + \Sigma M_C = 0; \qquad -P(0.25\text{ m}) + F_B(1\text{ m}) = 0 \qquad (3)$$

(Post Slips at *B* and Rotates about *C*.) This requires $F_C \leq \mu_C N_C$ and

$$F_B = \mu_B N_B; \qquad F_B = 0.2(400\text{ N}) = 80\text{ N}$$

Using this result and solving Eqs. 1 through 3, we obtain

$$P = 320\text{ N}$$
$$F_C = 240\text{ N}$$
$$N_C = 400\text{ N}$$

Since $F_C = 240\text{ N} > \mu_C N_C = 0.5(400\text{ N}) = 200\text{ N}$, slipping at C occurs. Thus the other case of movement must be investigated.

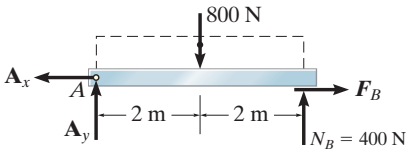

(b)

(Post Slips at *C* and Rotates about *B*.) Here $F_B \leq \mu_B N_B$ and

$$F_C = \mu_C N_C; \qquad F_C = 0.5 N_C \qquad (4)$$

Solving Eqs. 1 through 4 yields

$$P = 267\text{ N} \qquad \textit{Ans.}$$
$$N_C = 400\text{ N}$$
$$F_C = 200\text{ N}$$
$$F_B = 66.7\text{ N}$$

Obviously, this case occurs first since it requires a *smaller* value for P.

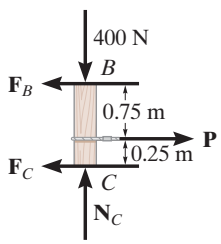

(c)

Fig. 8–10

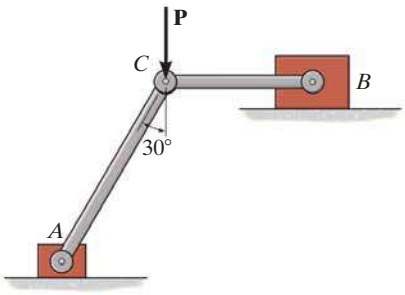

(a)

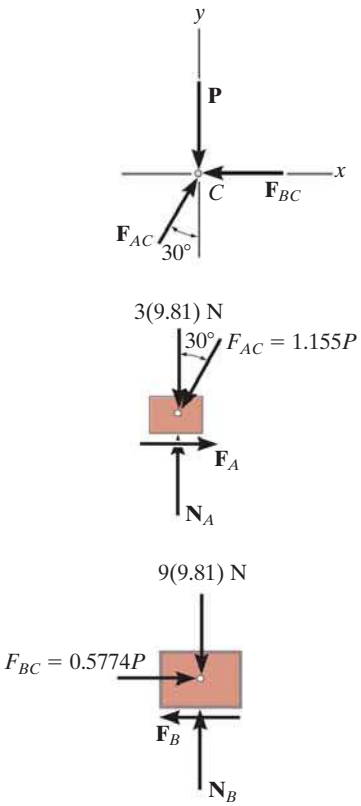

(b)

Fig. 8–11

Blocks A and B have a mass of 3 kg and 9 kg, respectively, and are connected to the weightless links shown in Fig. 8–11a. Determine the largest vertical force **P** that can be applied at the pin C without causing any movement. The coefficient of static friction between the blocks and the contacting surfaces is $\mu_s = 0.3$.

SOLUTION

Free-Body Diagram. The links are two-force members and so the free-body diagrams of pin C and blocks A and B are shown in Fig. 8–11b. Since the horizontal component of $\mathbf{F}_{AC}$ tends to move block A to the left, $\mathbf{F}_A$ must act to the right. Similarly, $\mathbf{F}_B$ must act to the left to oppose the tendency of motion of block B to the right, caused by $\mathbf{F}_{BC}$. There are seven unknowns and six available force equilibrium equations, two for the pin and two for each block, so that *only one* frictional equation is needed.

Equations of Equilibrium and Friction. The force in links AC and BC can be related to P by considering the equilibrium of pin C.

$$+\uparrow \Sigma F_y = 0; \qquad F_{AC}\cos 30° - P = 0; \qquad F_{AC} = 1.155P$$

$$\overset{+}{\rightarrow} \Sigma F_x = 0; \qquad 1.155P \sin 30° - F_{BC} = 0; \qquad F_{BC} = 0.5774P$$

Using the result for F_{AC}, for block A,

$$\overset{+}{\rightarrow} \Sigma F_x = 0; \qquad F_A - 1.155P \sin 30° = 0; \qquad F_A = 0.5774P \tag{1}$$

$$+\uparrow \Sigma F_y = 0; \qquad N_A - 1.155P \cos 30° - 3(9.81\text{ N}) = 0;$$

$$N_A = P + 29.43\text{ N} \tag{2}$$

Using the result for F_{BC}, for block B,

$$\overset{+}{\rightarrow} \Sigma F_x = 0; \qquad (0.5774P) - F_B = 0; \qquad F_B = 0.5774P \tag{3}$$

$$+\uparrow \Sigma F_y = 0; \qquad N_B - 9(9.81)\text{ N} = 0; \qquad N_B = 88.29\text{ N}$$

Movement of the system may be caused by the initial slipping of *either* block A or block B. If we assume that block A slips first, then

$$F_A = \mu_s N_A = 0.3N_A \tag{4}$$

Substituting Eqs. 1 and 2 into Eq. 4,

$$0.5774P = 0.3(P + 29.43)$$

$$P = 31.8\text{ N} \qquad \textit{Ans.}$$

Substituting this result into Eq. 3, we obtain $F_B = 18.4$ N. Since the maximum static frictional force at B is $(F_B)_{\max} = \mu_s N_B = 0.3(88.29\text{ N}) = 26.5\text{ N} > F_B$, block B will not slip. Thus, the above assumption is correct. Notice that if the inequality were not satisfied, we would have to assume slipping of block B and then solve for P.

PRELIMINARY PROBLEMS

P8–1. Determine the friction force at the surface of contact.

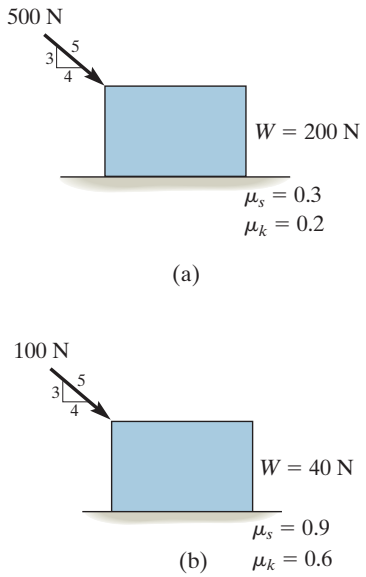

Prob. P8–1

P8–2. Determine **M** to cause impending motion of the cylinder.

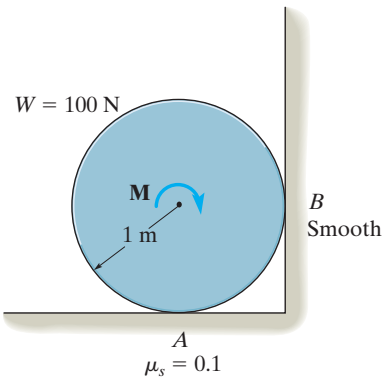

Prob. P8–2

P8–3. Determine the force P to move block B.

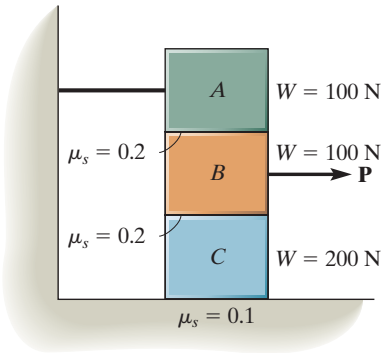

Prob. P8–3

P8–4. Determine the force P needed to cause impending motion of the block.

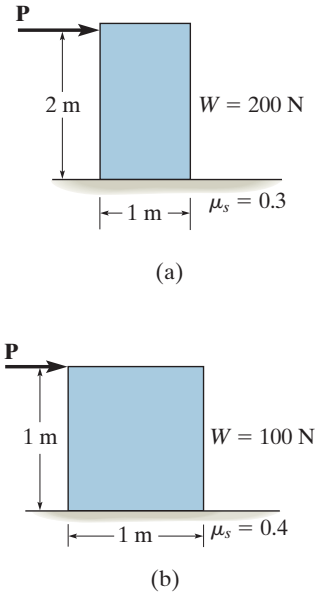

Prob. P8–4

All problem solutions must include FBDs.

F8–1. Determine the friction developed between the 50-kg crate and the ground if a) $P = 200$ N, and b) $P = 400$ N. The coefficients of static and kinetic friction between the crate and the ground are $\mu_s = 0.3$ and $\mu_k = 0.2$.

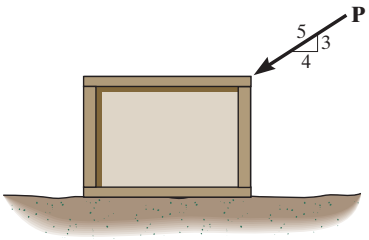

Prob. F8–1

F8–2. Determine the minimum force P to prevent the 30-kg rod AB from sliding. The contact surface at B is smooth, whereas the coefficient of static friction between the rod and the wall at A is $\mu_s = 0.2$.

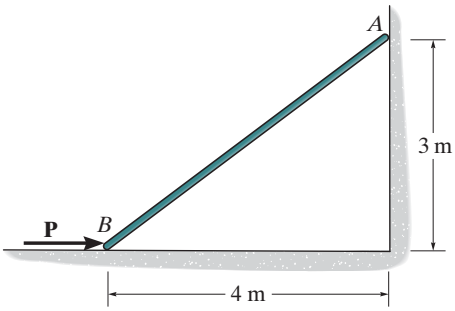

Prob. F8–2

F8–3. Determine the maximum force P that can be applied without causing the two 50-kg crates to move. The coefficient of static friction between each crate and the ground is $\mu_s = 0.25$.

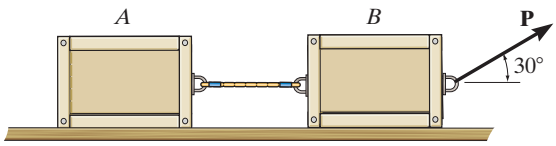

Prob. F8–3

F8–4. If the coefficient of static friction at contact points A and B is $\mu_s = 0.3$, determine the maximum force P that can be applied without causing the 100-kg spool to move.

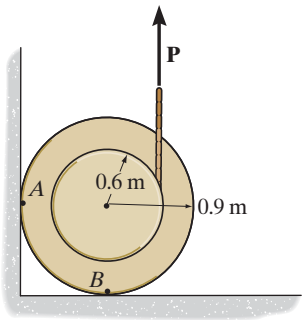

Prob. F8–4

F8–5. Determine the maximum force P that can be applied without causing movement of the 250-lb crate that has a center of gravity at G. The coefficient of static friction at the floor is $\mu_s = 0.4$.

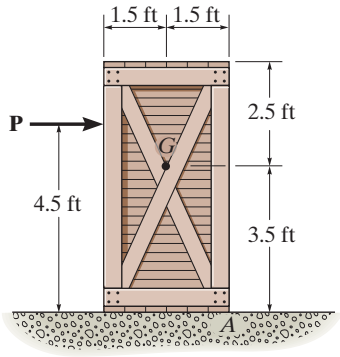

Prob. F8–5

F8–6. Determine the minimum coefficient of static friction between the uniform 50-kg spool and the wall so that the spool does not slip.

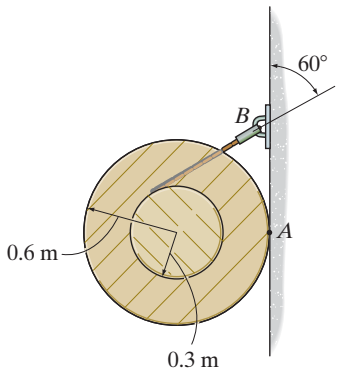

Prob. F8–6

F8–7. Blocks A, B, and C have weights of 50 N, 25 N, and 15 N, respectively. Determine the smallest horizontal force P that will cause impending motion. The coefficient of static friction between A and B is $\mu_s = 0.3$, between B and C, $\mu_s' = 0.4$, and between block C and the ground, $\mu_s'' = 0.35$.

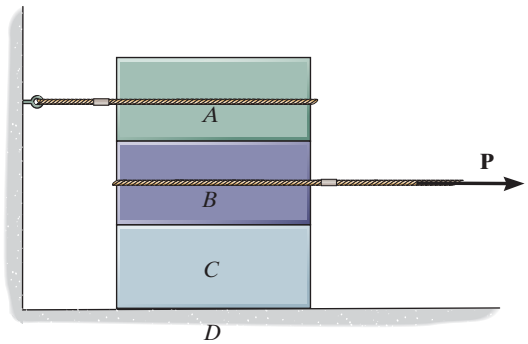

Prob. F8–7

F8–8. If the coefficient of static friction at all contacting surfaces is μ_s, determine the inclination θ at which the identical blocks, each of weight W, begin to slide.

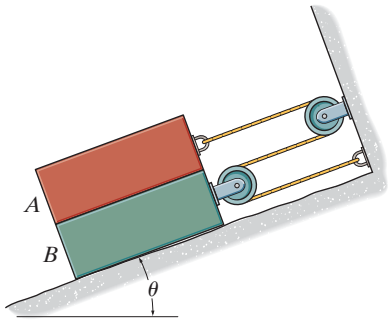

Prob. F8–8

F8–9. Blocks A and B have a mass of 7 kg and 10 kg, respectively. Using the coefficients of static friction indicated, determine the largest force P which can be applied to the cord without causing motion. There are pulleys at C and D.

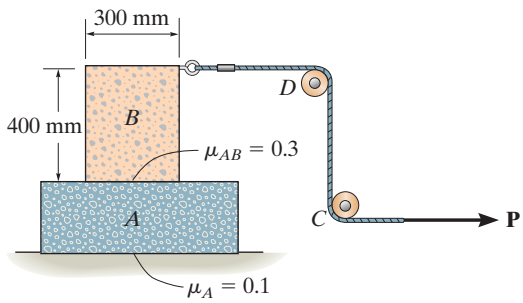

Prob. F8–9

PROBLEMS

All problem solutions must include FBDs.

8–1. Determine the maximum force P the connection can support so that no slipping occurs between the plates. There are four bolts used for the connection and each is tightened so that it is subjected to a tension of 4 kN. The coefficient of static friction between the plates is $\mu_s = 0.4$.

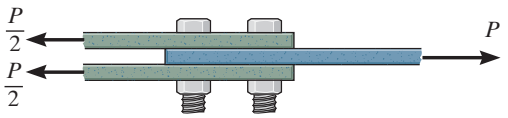

Prob. 8–1

8–2. The tractor exerts a towing force $T = 400$ lb. Determine the normal reactions at each of the two front and two rear tires and the tractive frictional force **F** on each rear tire needed to pull the load forward at constant velocity. The tractor has a weight of 7500 lb and a center of gravity located at G_T. An additinal weight of 600 lb is added to its front having a center of gravity at G_A. Take $\mu_s = 0.4$. The front wheels are free to roll.

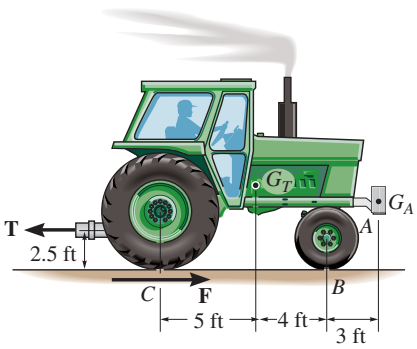

Prob. 8–2

8–3. The mine car and its contents have a total mass of 6 Mg and a center of gravity at G. If the coefficient of static friction between the wheels and the tracks is $\mu_s = 0.4$ when the wheels are locked, find the normal force acting on the front wheels at B and the rear wheels at A when the brakes at both A and B are locked. Does the car move?

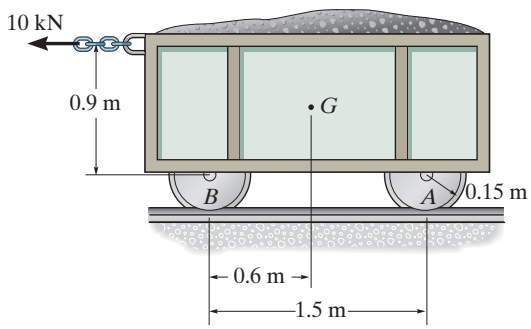

Prob. 8–3

***8–4.** The winch on the truck is used to hoist the garbage bin onto the bed of the truck. If the loaded bin has a weight of 8500 lb and center of gravity at G, determine the force in the cable needed to begin the lift. The coefficients of static friction at A and B are $\mu_A = 0.3$ and $\mu_B = 0.2$, respectively. Neglect the height of the support at A.

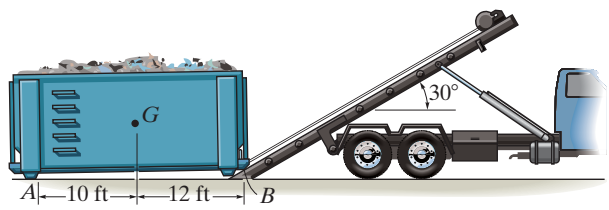

Prob. 8–4

8–5. The automobile has a mass of 2 Mg and center of mass at G. Determine the towing force **F** required to move the car if the back brakes are locked, and the front wheels are free to roll. Take $\mu_s = 0.3$.

8–6. The automobile has a mass of 2 Mg and center of mass at G. Determine the towing force **F** required to move the car. Both the front and rear brakes are locked. Take $\mu_s = 0.3$.

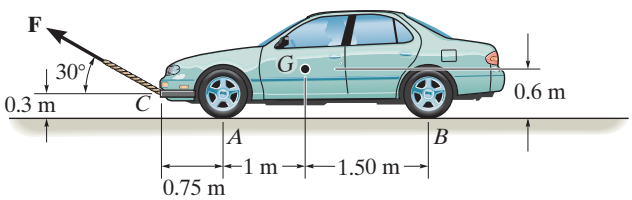

Probs. 8–5/6

8–7. The block brake consists of a pin-connected lever and friction block at B. The coefficient of static friction between the wheel and the lever is $\mu_s = 0.3$, and a torque of $5\ \text{N}\cdot\text{m}$ is applied to the wheel. Determine if the brake can hold the wheel stationary when the force applied to the lever is (a) $P = 30$ N, (b) $P = 70$ N.

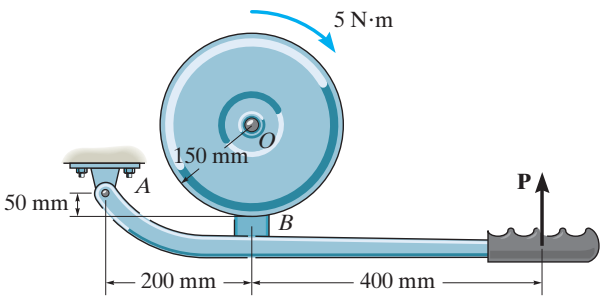

Prob. 8–7

***8–8.** The block brake consists of a pin-connected lever and friction block at B. The coefficient of static friction between the wheel and the lever is $\mu_s = 0.3$, and a torque of $5\ \text{N}\cdot\text{m}$ is applied to the wheel. Determine if the brake can hold the wheel stationary when the force applied to the lever is (a) $P = 30$ N, (b) $P = 70$ N.

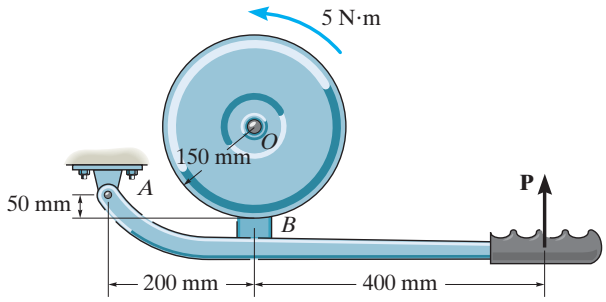

Prob. 8–8

8–9. The pipe of weight W is to be pulled up the inclined plane of slope α using a force **P**. If **P** acts at an angle ϕ, show that for slipping $P = W\sin(\alpha + \theta)/\cos(\phi - \theta)$, where θ is the angle of static friction; $\theta = \tan^{-1}\mu_s$.

8–10. Determine the angle ϕ at which the applied force **P** should act on the pipe so that the magnitude of **P** is as small as possible for pulling the pipe up the incline. What is the corresponding value of P? The pipe weighs W and the slope α is known. Express the answer in terms of the angle of kinetic friction, $\theta = \tan^{-1}\mu_k$.

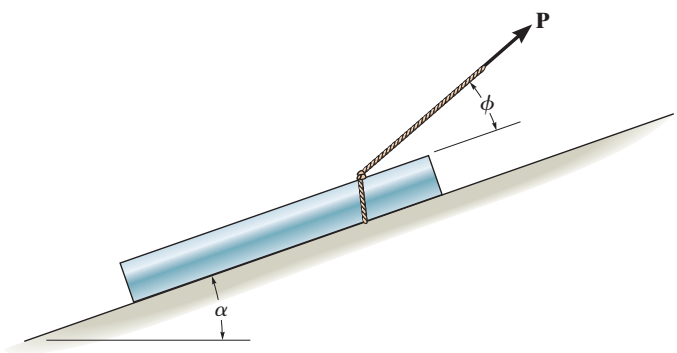

Probs. 8–9/10

8–11. Determine the maximum weight W the man can lift with constant velocity using the pulley system, without and then with the "leading block" or pulley at A. The man has a weight of 200 lb and the coefficient of static friction between his feet and the ground is $\mu_s = 0.6$.

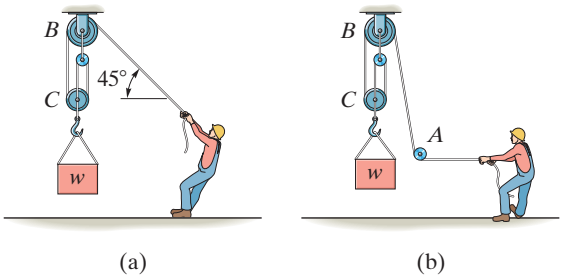

Prob. 8–11

8–13. If a torque of $M = 300\ \text{N}\cdot\text{m}$ is applied to the flywheel, determine the force that must be developed in the hydraulic cylinder CD to prevent the flywheel from rotating. The coefficient of static friction between the friction pad at B and the flywheel is $\mu_s = 0.4$.

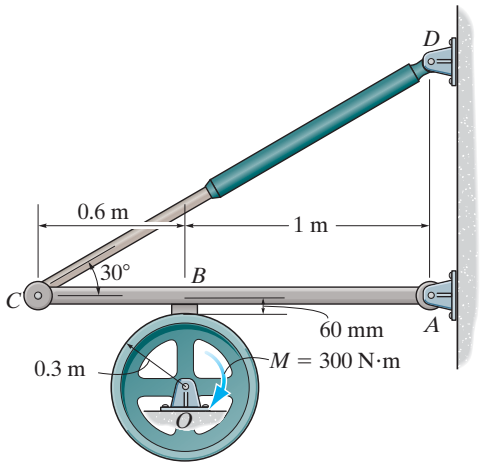

Prob. 8–13

***8–12.** The block brake is used to stop the wheel from rotating when the wheel is subjected to a couple moment $\mathbf{M}_0$. If the coefficient of static friction between the wheel and the block is μ_s, determine the smallest force P that should be applied.

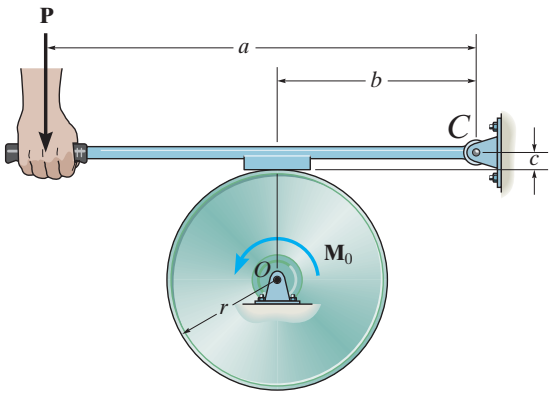

Prob. 8–12

8–14. The car has a mass of 1.6 Mg and center of mass at G. If the coefficient of static friction between the shoulder of the road and the tires is $\mu_s = 0.4$, determine the greatest slope θ the shoulder can have without causing the car to slip or tip over if the car travels along the shoulder at constant velocity.

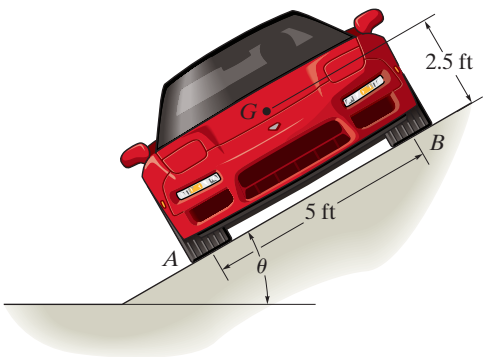

Prob. 8–14

8–15. The log has a coefficient of state friction of $\mu_s = 0.3$ with the ground and a weight of 40 lb/ft. If a man can pull on the rope with a maximum force of 80 lb, determine the greatest length l of log he can drag.

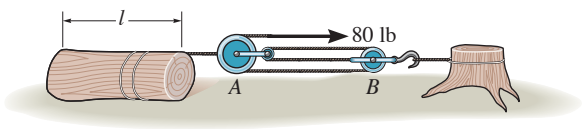

Prob. 8–15

***8–16.** The 180-lb man climbs up the ladder and stops at the position shown after he senses that the ladder is on the verge of slipping. Determine the inclination θ of the ladder if the coefficient of static friction between the friction pad A and the ground is $\mu_s = 0.4$. Assume the wall at B is smooth. The center of gravity for the man is at G. Neglect the weight of the ladder.

8–17. The 180-lb man climbs up the ladder and stops at the position shown after he senses that the ladder is on the verge of slipping. Determine the coefficient of static friction between the friction pad at A and ground if the inclination of the ladder is $\theta = 60°$ and the wall at B is smooth. The center of gravity for the man is at G. Neglect the weight of the ladder.

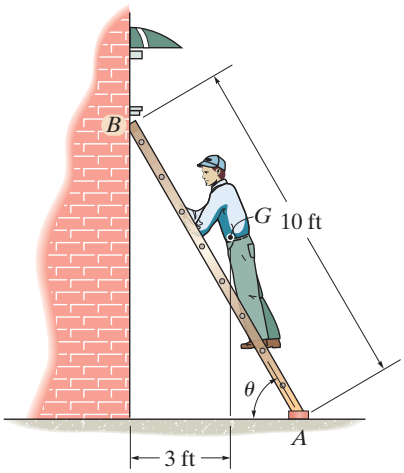

Probs. 8–16/17

8–18. The spool of wire having a weight of 300 lb rests on the ground at B and against the wall at A. Determine the force P required to begin pulling the wire horizontally off the spool. The coefficient of static friction between the spool and its points of contact is $\mu_s = 0.25$.

8–19. The spool of wire having a weight of 300 lb rests on the ground at B and against the wall at A. Determine the normal force acting on the spool at A if $P = 300$ lb. The coefficient of static friction between the spool and the ground at B is $\mu_s = 0.35$. The wall at A is smooth.

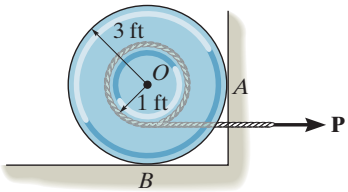

Probs. 8–18/19

***8–20.** The ring has a mass of 0.5 kg and is resting on the surface of the table. In an effort to move the ring a normal force **P** from the finger is exerted on it. If this force is directed towards the ring's center O as shown, determine its magnitude when the ring is on the verge of slipping at A. The coefficient of static friction at A is $\mu_A = 0.2$ and at B, $\mu_B = 0.3$.

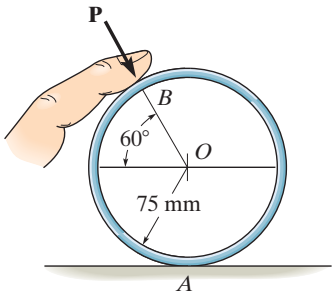

Prob. 8–20

8–21. A man attempts to support a stack of books horizontally by applying a compressive force of $F = 120$ N to the ends of the stack with his hands. If each book has a mass of 0.95 kg, determine the greatest number of books that can be supported in the stack. The coefficient of static friction between his hands and a book is $(\mu_s)_h = 0.6$ and between any two books $(\mu_s)_b = 0.4$.

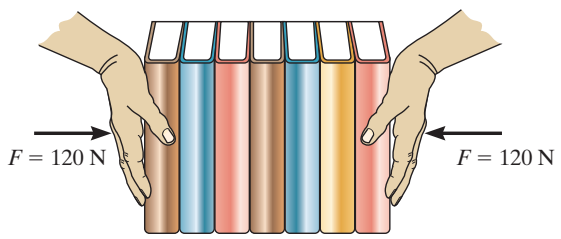

Prob. 8–21

8–22. The tongs are used to lift the 150-kg crate, whose center of mass is at G. Determine the least coefficient of static friction at the pivot blocks so that the crate can be lifted.

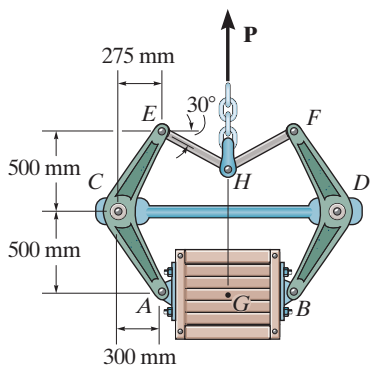

Prob. 8–22

8–23. The beam is supported by a pin at A and a roller at B which has negligible weight and a radius of 15 mm. If the coefficient of static friction is $\mu_B = \mu_C = 0.3$, determine the largest angle θ of the incline so that the roller does not slip for any force **P** applied to the beam.

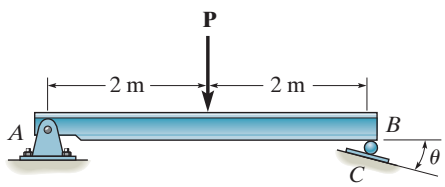

Prob. 8–23

***8–24.** The uniform thin pole has a weight of 30 lb and a length of 26 ft. If it is placed against the smooth wall and on the rough floor in the position $d = 10$ ft, will it remain in this position when it is released? The coefficient of static friction is $\mu_s = 0.3$.

8–25. The uniform pole has a weight of 30 lb and a length of 26 ft. Determine the maximum distance d it can be placed from the smooth wall and not slip. The coefficient of static friction between the floor and the pole is $\mu_s = 0.3$.

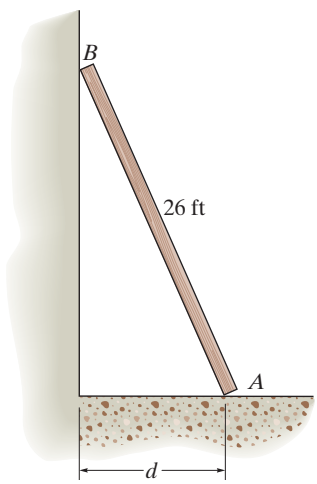

Probs. 8–24/25

8–26. The block brake is used to stop the wheel from rotating when the wheel is subjected to a couple moment $M_0 = 360\ \text{N}\cdot\text{m}$. If the coefficient of static friction between the wheel and the block is $\mu_s = 0.6$, determine the smallest force P that should be applied.

8–27. Solve Prob. 8–26 if the couple moment $\mathbf{M}_0$ is applied counterclockwise.

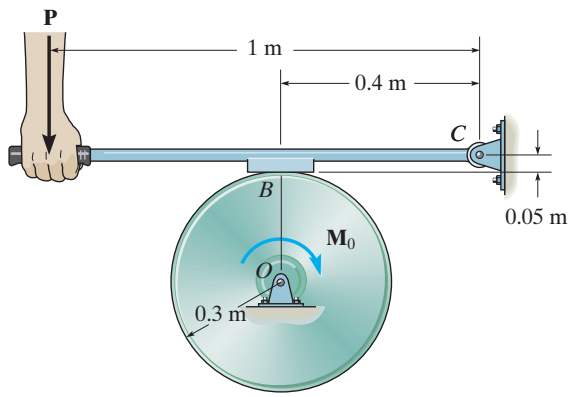

Probs. 8–26/27

***8–28.** A worker walks up the sloped roof that is defined by the curve $y = (5e^{0.01x})$ ft, where x is in feet. Determine how high h he can go without slipping. The coefficient of static friction is $\mu_s = 0.6$.

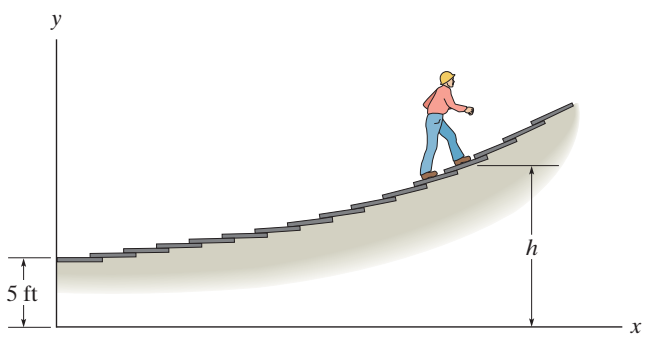

Prob. 8–28

8–29. The friction pawl is pinned at A and rests against the wheel at B. It allows freedom of movement when the wheel is rotating counterclockwise about C. Clockwise rotation is prevented due to friction of the pawl which tends to bind the wheel. If $(\mu_s)_B = 0.6$, determine the design angle θ which will prevent clockwise motion for any value of applied moment M. *Hint*: Neglect the weight of the pawl so that it becomes a two-force member.

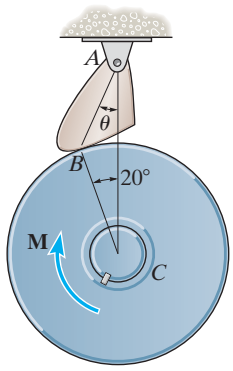

Prob. 8–29

8–30. Two blocks A and B have a weight of 10 lb and 6 lb, respectively. They are resting on the incline for which the coefficients of static friction are $\mu_A = 0.15$ and $\mu_B = 0.25$. Determine the incline angle θ for which both blocks begin to slide. Also find the required stretch or compression in the connecting spring for this to occur. The spring has a stiffness of $k = 2\ \text{lb/ft}$.

8–31. Two blocks A and B have a weight of 10 lb and 6 lb, respectively. They are resting on the incline for which the coefficients of static friction are $\mu_A = 0.15$ and $\mu_B = 0.25$. Determine the angle θ which will cause motion of one of the blocks. What is the friction force under each of the blocks when this occurs? The spring has a stiffness of $k = 2\ \text{lb/ft}$ and is originally unstretched.

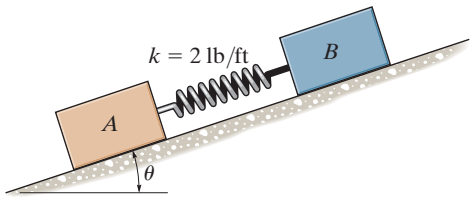

Probs. 8–30/31

***8–32.** Determine the smallest force P that must be applied in order to cause the 150-lb uniform crate to move. The coefficent of static friction between the crate and the floor is $\mu_s = 0.5$.

8–33. The man having a weight of 200 lb pushes horizontally on the crate. If the coefficient of static friction between the 450-lb crate and the floor is $\mu_s = 0.3$ and between his shoes and the floor is $\mu'_s = 0.6$, determine if he can move the crate.

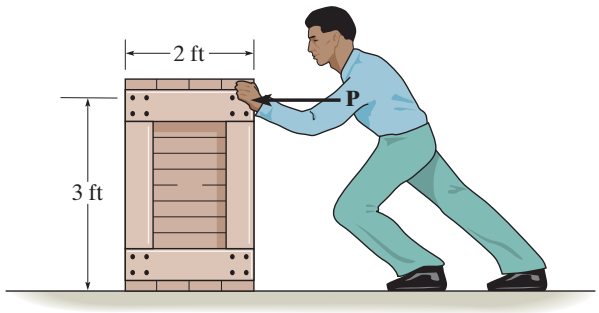

Probs. 8–32/33

8–34. The uniform hoop of weight W is subjected to the horizontal force P. Determine the coefficient of static friction between the hoop and the surface of A and B if the hoop is on the verge of rotating.

8–35. Determine the maximum horizontal force **P** that can be applied to the 30-lb hoop without causing it to rotate. The coefficient of static friction between the hoop and the surfaces A and B is $\mu_s = 0.2$. Take $r = 300$ mm.

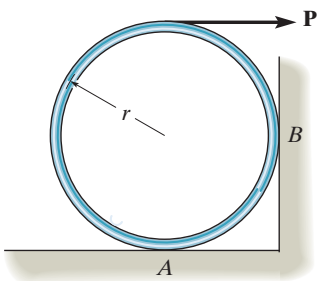

Probs. 8–34/35

***8–36.** Determine the minimum force P needed to push the tube E up the incline. The force acts parallel to the plane, and the coefficients of static friction at the contacting surfaces are $\mu_A = 0.2$, $\mu_B = 0.3$, and $\mu_C = 0.4$. The 100-kg roller and 40-kg tube each have a radius of 150 mm.

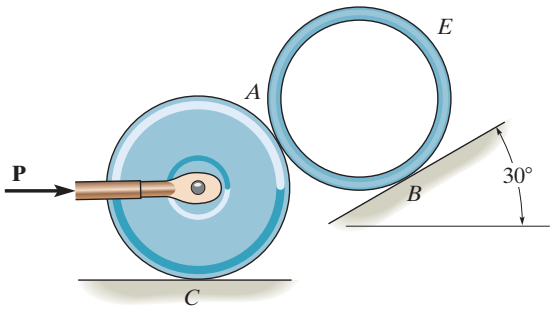

Prob. 8–36

8–37. The coefficients of static and kinetic friction between the drum and brake bar are $\mu_s = 0.4$ and $\mu_k = 0.3$, respectively. If $M = 50\ \text{N}\cdot\text{m}$ and $P = 85$ N, determine the horizontal and vertical components of reaction at the pin O. Neglect the weight and thickness of the brake. The drum has a mass of 25 kg.

8–38. The coefficient of static friction between the drum and brake bar is $\mu_s = 0.4$. If the moment $M = 35\ \text{N}\cdot\text{m}$, determine the smallest force P that needs to be applied to the brake bar in order to prevent the drum from rotating. Also determine the corresponding horizontal and vertical components of reaction at pin O. Neglect the weight and thickness of the brake bar. The drum has a mass of 25 kg.

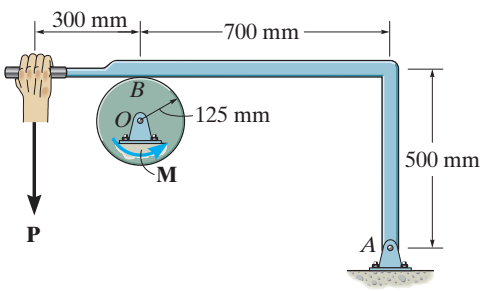

Probs. 8–37/38

8–39. Determine the smallest coefficient of static friction at both A and B needed to hold the uniform 100-lb bar in equilibrium. Neglect the thickness of the bar. Take $\mu_A = \mu_B = \mu$.

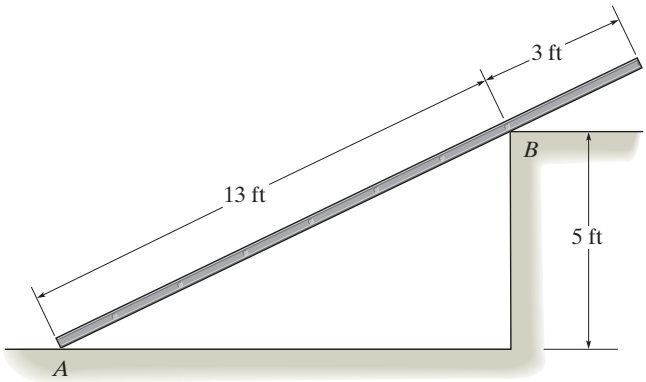

Prob. 8–39

***8–40.** If $\theta = 30°$, determine the minimum coefficient of static friction at A and B so that equilibrium of the supporting frame is maintained regardless of the mass of the cylinder. Neglect the mass of the rods.

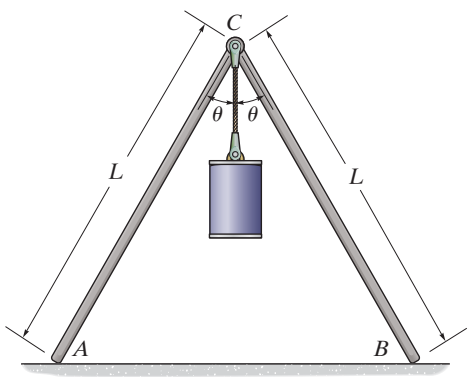

Prob. 8–40

8–41. If the coefficient of static friction at A and B is $\mu_s = 0.6$, determine the maximum angle θ so that the frame remains in equilbrium, regardless of the mass of the cylinder. Neglect the mass of the rods.

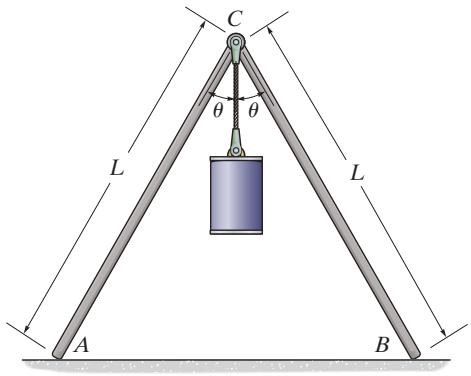

Prob. 8–41

8–42. The 100-kg disk rests on a surface for which $\mu_B = 0.2$. Determine the smallest vertical force **P** that can be applied tangentially to the disk which will cause motion to impend.

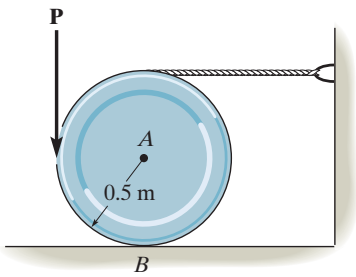

Prob. 8–42

8–43. Investigate whether the equilibrium can be maintained. The uniform block has a mass of 500 kg, and the coefficient of static friction is $\mu_s = 0.3$.

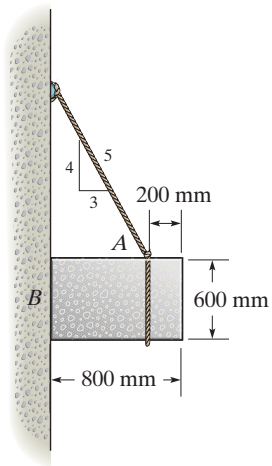

Prob. 8–43

***8–44.** The homogenous semicylinder has a mass of 20 kg and mass center at G. If force **P** is applied at the edge, and $r = 300$ mm, determine the angle θ at which the semicylinder is on the verge of slipping. The coefficient of static friction between the plane and the cylinder is $\mu_s = 0.3$. Also, what is the corresponding force P for this case?

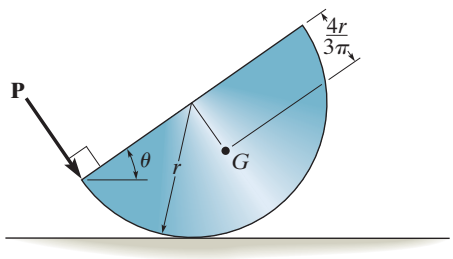

Prob. 8–44

8–45. The beam AB has a negligible mass and thickness and is subjected to a triangular distributed loading. It is supported at one end by a pin and at the other end by a post having a mass of 50 kg and negligible thickness. Determine the minimum force P needed to move the post. The coefficients of static friction at B and C are $\mu_B = 0.4$ and $\mu_C = 0.2$, respectively.

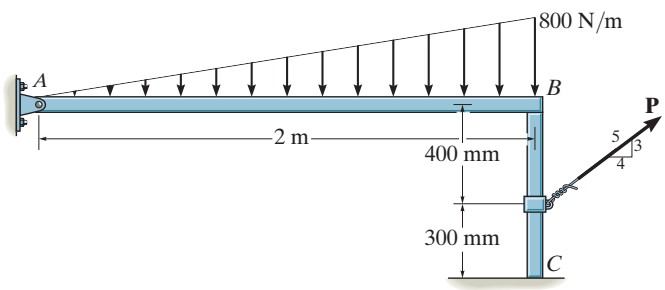

Prob. 8–45

8–46. The beam AB has a negligible mass and thickness and is subjected to a triangular distributed loading. It is supported at one end by a pin and at the other end by a post having a mass of 50 kg and negligible thickness. Determine the two coefficients of static friction at B and at C so that when the magnitude of the applied force is increased to $P = 150$ N, the post slips at both B and C simultaneously.

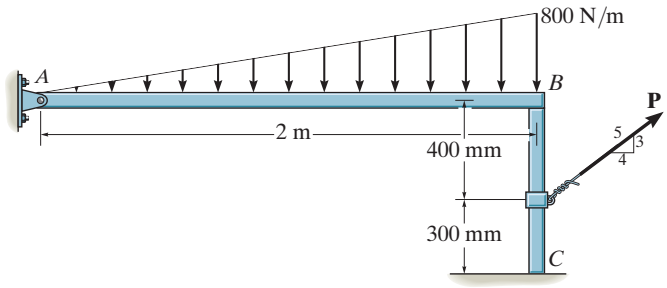

Prob. 8–46

8–47. Crates A and B weigh 200 lb and 150 lb, respectively. They are connected together with a cable and placed on the inclined plane. If the angle θ is gradually increased, determine θ when the crates begin to slide. The coefficients of static friction between the crates and the plane are $\mu_A = 0.25$ and $\mu_B = 0.35$.

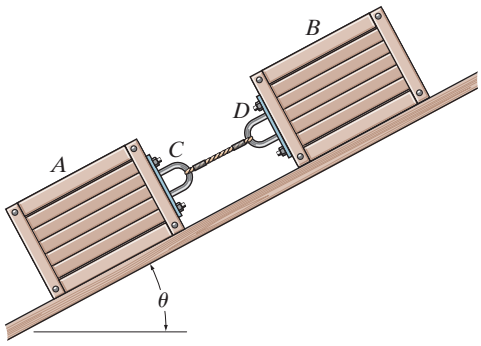

Prob. 8–47

***8–48.** Two blocks A and B, each having a mass of 5 kg, are connected by the linkage shown. If the coefficient of static friction at the contacting surfaces is $\mu_s = 0.5$, determine the largest force P that can be applied to pin C of the linkage without causing the blocks to move. Neglect the weight of the links.

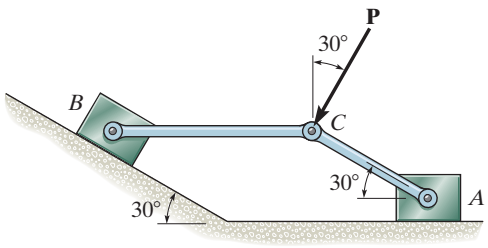

Prob. 8–48

8–49. The uniform crate has a mass of 150 kg. If the coefficient of static friction between the crate and the floor is $\mu_s = 0.2$, determine whether the 85-kg man can move the crate. The coefficient of static friction between his shoes and the floor is $\mu'_s = 0.4$. Assume the man only exerts a horizontal force on the crate.

8–50. The uniform crate has a mass of 150 kg. If the coefficient of static friction between the crate and the floor is $\mu_s = 0.2$, determine the smallest mass of the man so he can move the crate. The coefficient of static friction between his shoes and the floor is $\mu'_s = 0.45$. Assume the man exerts only a horizontal force on the crate.

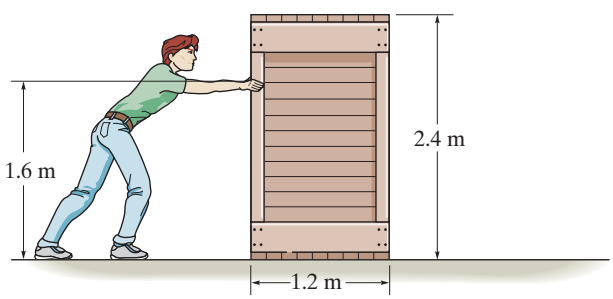

Probs. 8–49/50

8–51. Beam AB has a negligible mass and thickness, and supports the 200-kg uniform block. It is pinned at A and rests on the top of a post, having a mass of 20 kg and negligible thickness. Determine the minimum force P needed to move the post. The coefficients of static friction at B and C are $\mu_B = 0.4$ and $\mu_C = 0.2$, respectively.

***8–52.** Beam AB has a negligible mass and thickness, and supports the 200-kg uniform block. It is pinned at A and rests on the top of a post, having a mass of 20 kg and negligible thickness. Determine the two coefficients of static friction at B and at C so that when the magnitude of the applied force is increased to $P = 300$ N, the post slips at both B and C simultaneously.

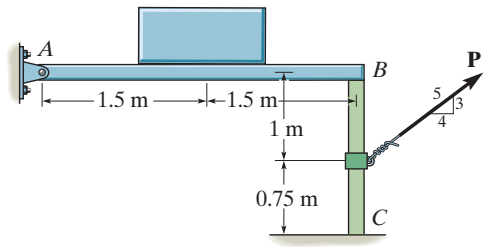

Probs. 8–51/52

8–53. Determine the smallest couple moment that can be applied to the 150-lb wheel that will cause impending motion. The uniform concrete block has a weight of 300 lb. The coefficients of static friction are $\mu_A = 0.2$, $\mu_B = 0.3$, and between the concrete block and the floor, $\mu = 0.4$.

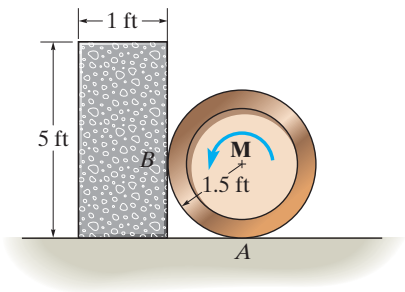

Prob. 8–53

8–54. Determine the greatest angle θ so that the ladder does not slip when it supports the 75-kg man in the position shown. The surface is rather slippery, where the coefficient of static friction at A and B is $\mu_s = 0.3$.

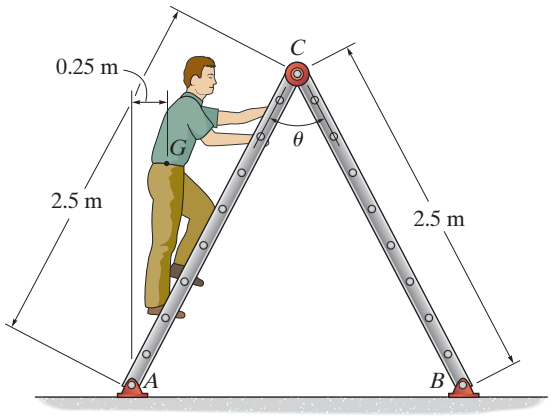

Prob. 8–54

8–55. The wheel weighs 20 lb and rests on a surface for which $\mu_B = 0.2$. A cord wrapped around it is attached to the top of the 30-lb homogeneous block. If the coefficient of static friction at D is $\mu_D = 0.3$, determine the smallest vertical force that can be applied tangentially to the wheel which will cause motion to impend.

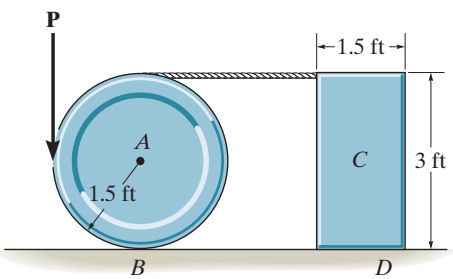

Prob. 8–55

***8–56.** The disk has a weight W and lies on a plane that has a coefficient of static friction μ. Determine the maximum height h to which the plane can be lifted without causing the disk to slip.

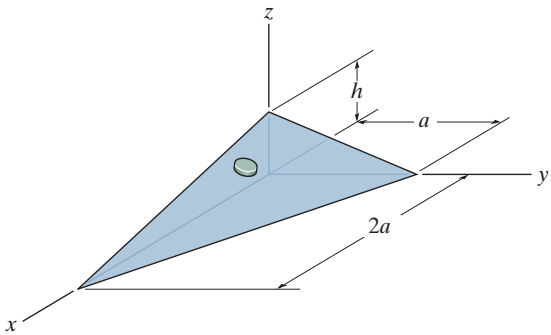

Prob. 8–56

8–57. The man has a weight of 200 lb, and the coefficient of static friction between his shoes and the floor is $\mu_s = 0.5$. Determine where he should position his center of gravity G at d in order to exert the maximum horizontal force on the door. What is this force?

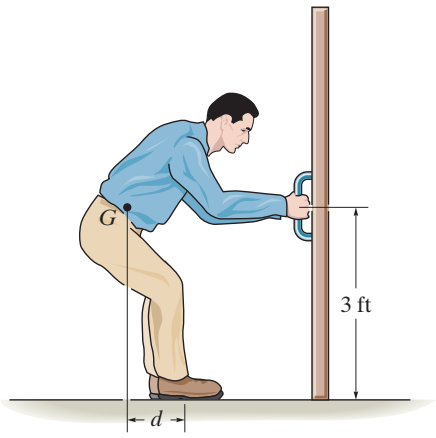

Prob. 8–57

CONCEPTUAL PROBLEMS

C8–1. Draw the free-body diagrams of each of the two members of this friction tong used to lift the 100-kg block.

C8–1 (© Russell C. Hibbeler)

C8–2. Show how to find the force needed to move the top block. Use reasonable data and use an equilibrium analysis to explain your answer.

C8–2 (© Russell C. Hibbeler)

C8–3. The rope is used to tow the refrigerator. Is it best to pull slightly up on the rope as shown, pull horizontally, or pull somewhat downwards? Also, is it best to attach the rope at a high position as shown, or at a lower position? Do an equilibrium analysis to explain your answer.

C8–4. The rope is used to tow the refrigerator. In order to prevent yourself from slipping while towing, is it best to pull up as shown, pull horizontally, or pull downwards on the rope? Do an equilibrium analysis to explain your answer.

C8–3/4 (© Russell C. Hibbeler)

C8–5. Explain how to find the maximum force this man can exert on the vehicle. Use reasonable data and use an equilibrium analysis to explain your answer.

C8–5 (© Russell C. Hibbeler)